TOWN OF ORLEANS, MA

DOWNTOWN AREA COLLECTION SYSTEM AND PUMP STATION

CONTRACT NO. 2019-02
SRF NO. 4486
JANUARY 2020

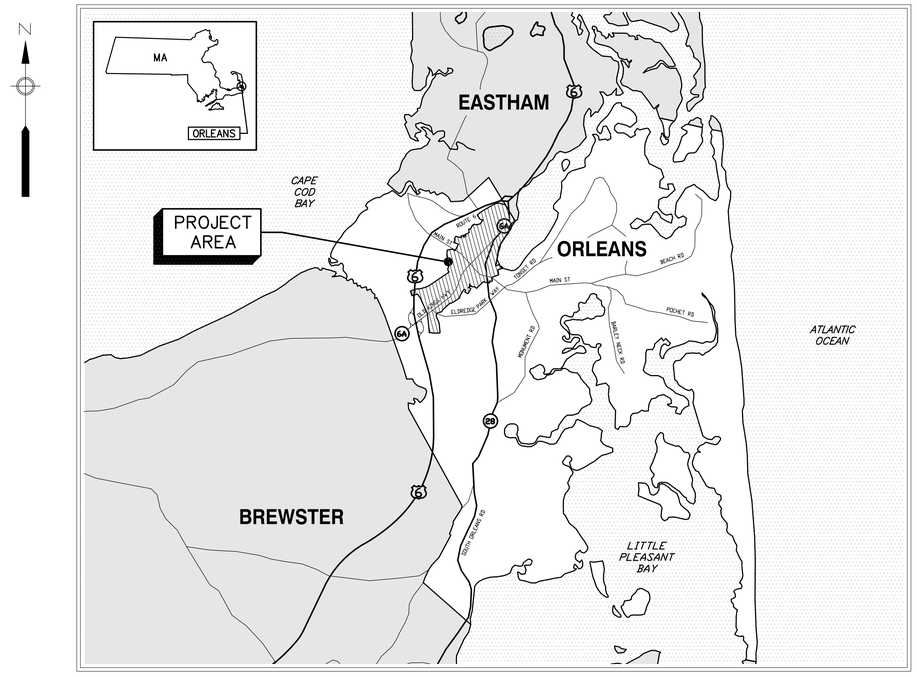

LOCATION PLAN

APPROXIMATE SCALE: 1" = 5000'

0 5000 10,000 20,000

SCALE: 1"=5000'

AECOM

PROJECT

DOWNTOWN AREA COLLECTION SYSTEM AND PUMP STATIONS

CONTRACT No. 2019-02
SRF No. 4486

OWNER

TOWN OF ORLEANS, MA
19 SCHOOL ROAD
ORLEANS, MA 02653
(508) 240-3700

ENGINEER

AECOM TECHNICAL SERVICES, INC.
9 JONATHAN BOURNE DRIVE
POCASSET, MA 02559
PHONE: (508) 833-6950
www.aecom.com

REGISTRATION

COMMONWEALTH OF MASSACHUSETTS
THOMAS E. PARECE
CIVIL
No. 34465
REGISTERED
PROFESSIONAL ENGINEER

ISSUE/REVISION

I/R	DATE	DESCRIPTION

PROJECT NUMBER

60587515

Designed By:	**M. CURRAN**
Drawn By:	**M. CURRAN**
Dept Check:	**T. PARECE**
Proj Check:	**M. DONOGHUE**
Date:	**JANUARY 2020**
Scale:	**AS NOTED**

DISCIPLINE

GENERAL

SHEET TITLE

COVER SHEET

SHEET NUMBER

00 G-001

Last saved by: CURRANM(2020-01-16) Last Plotted: 2020-02-04
Filename: L:\WORK\60476844 - ORLEANS DOWNTOWN SEWER\SHEETS\G\00 G-001.DWG

INDEX OF DRAWINGS

SHEET NO.	TITLE
GENERAL	
00 G-001	COVER SHEET
00 G-002	INDEX OF DRAWINGS
00 G-003	SHEET KEY PLAN
CIVIL	
00 C-001	GENERAL NOTES, LEGENDS AND ABBREVIATIONS
01 C-101	PLAN AND PROFILE SEWER LOTS HOLLOW RD I
01 C-102	PLAN AND PROFILE SEWER LOTS HOLLOW ROAD II
01 C-103	PLAN AND PROFILE SEWER WEST ROAD I
01 C-104	PLAN AND PROFILE SEWER WEST ROAD II
01 C-105	PLAN AND PROFILE SEWER ROUTE 6 CROSSING
01 C-106	PLAN AND PROFILE SEWER OLD COLONY WAY I
01 C-107	PLAN AND PROFILE SEWER OLD COLONY WAY II
01 C-108	PLAN AND PROFILE SEWER OLD COLONY WAY III
01 C-109	PLAN AND PROFILE SEWER OLD TOTE ROAD
01 C-110	PLAN AND PROFILE SEWER CRANBERRY HIGHWAY
01 C-401	PUMP STATION NO. 1 SITE PLAN
02 C-101	PLAN AND PROFILE SEWER CRANBERRY HIGHWAY II
02 C-102	PLAN AND PROFILE SEWER CRANBERRY HIGHWAY III
02 C-103	PLAN AND PROFILE SEWER CRANBERRY HIGHWAY IV
02 C-104	PLAN AND PROFILE SEWER BREWSTER CROSSROAD I
02 C-105	PLAN AND PROFILE SEWER BREWSTER CROSSROAD II
02 C-106	PLAN AND PROFILE SEWER SOUTH ORLEANS ROAD
02 C-107	PLAN AND PROFILE SEWER COVE ROAD
02 C-108	PLAN AND PROFILE SEWER DOANE AND CUMMINGS ROAD
02 C-109	PLAN AND PROFILE SEWER CENTER PLACE
02 C-110	PLAN AND PROFILE SEWER COVE ROAD EXT.
02 C-401	PUMP STATION NO. 2 SITE PLAN
02 C-402	PUMP STATION NO. 2 SEWER PROFILE
03 C-101	PLAN AND PROFILE SEWER MAIN STREET
03 C-102	PLAN AND PROFILE SEWER LOCUST ROAD I
03 C-103	PLAN AND PROFILE SEWER LOCUST ROAD II
03 C-104	PLAN AND PROFILE SEWER LOCUST ROAD III
03 C-105	PLAN AND PROFILE SEWER JONES ROAD
03 C-106	PLAN AND PROFILE SEWER LIBERTY LANE
03 C-107	PLAN AND PROFILE SEWER CANAL ROAD I
03 C-108	PLAN AND PROFILE SEWER CANAL ROAD II
03 C-109	PLAN AND PROFILE SEWER CANAL ROAD III
03 C-110	PLAN AND PROFILE SEWER CROSS COUNTRY I
03 C-111	PLAN AND PROFILE SEWER CROSS COUNTRY II
03 C-112	PLAN AND PROFILE SEWER CRANBERRY HIGHWAY I
03 C-113	PLAN AND PROFILE SEWER CRANBERRY HIGHWAY II
03 C-114	PLAN AND PROFILE SEWER CRANBERRY HIGHWAY III
03 C-115	PLAN AND PROFILE SEWER COUNTY ROAD
03 C-116	PLAN AND PROFILE SEWER SOUTH ORLEANS ROAD
CIVIL (CONTINUED)	
03 C-117	PLAN AND PROFILE SEWER COTTAGE & NORTH COTTAGE STREET
03 C-401	PUMP STATION NO. 3 SITE PLAN
99 C-501	DETAILS I
99 C-502	DETAILS II
99 C-503	DETAILS III
99 C-504	DETAILS IV
99 C-505	DETAILS V
99 C-506	DETAILS VI
99 C-507	DETAILS VII
99 C-508	DETAILS VIII
99 C-509	DETAILS IX
99 C-510	DETAILS X
99 C-511	DETAILS XI
99 C-601	TRAFFIC MANAGEMENT TYPICAL APPLICATIONS I
99 C-602	TRAFFIC MANAGEMENT TYPICAL APPLICATIONS II
99 C-603	TRAFFIC MANAGEMENT DETAILS & TEMPORARY SIGN SUMMARY
MECHANICAL PROCESS	
00 D-001	MECHANICAL PROCESS LEGEND
00 D-002	GENERAL NOTES AND ABBREVIATIONS
00 D-003	SCHEDULES
01 D-101	PUMP STATION NO. 1 PLAN AND SECTION
02 D-101	PUMP STATION NO. 2 PLAN AND SECTION
03 D-101	PUMP STATION NO. 3 PLAN AND SECTION
99 D-501	DETAILS I
ELECTRICAL	
00 E-001	ELECTRICAL LEGEND, ABBREVIATIONS AND GENERAL NOTES
00 E-002	ELECTRICAL SITE PLAN- FIBER NETWORK I
00 E-003	ELECTRICAL SITE PLAN- FIBER NETWORK II
00 E-601	ELECTRICAL SCHEDULES I
01 E-001	PUMP STATION NO. 1 - ELECTRICAL SITE PLAN
01 E-002	PUMP STATION NO. 1 - ELECTRICAL SINGLE LINE DIAGRAM
01 E-101	PUMP STATION NO. 1 - ELECTRICAL POWER PLAN
01 E-601	PUMP STATION NO. 1 - ELECTRICAL RISER DIAGRAMS
01 E-602	PUMP STATION NO. 1 - EE-01 ELEVATION
01 E-603	PUMP STATION NO. 1 - WIRING SCHEMATICS
02 E-001	PUMP STATION NO. 2 - ELECTRICAL SITE PLAN
02 E-002	PUMP STATION NO. 2 - ELECTRICAL SINGLE LINE DIAGRAM
02 E-101	PUMP STATION NO. 2 - ELECTRICAL POWER PLAN
02 E-601	PUMP STATION NO. 2 - ELECTRICAL RISER DIAGRAMS
02 E-602	PUMP STATION NO. 2 - EE-02 ELEVATION
02 E-603	PUMP STATION NO. 2 - WIRING SCHEMATICS
03 E-001	PUMP STATION NO. 3 - ELECTRICAL SITE PLAN
03 E-002	PUMP STATION NO. 3 - ELECTRICAL SINGLE LINE DIAGRAM
ELECTRICAL (CONTINUED)	
03 E-101	PUMP STATION NO. 3 - ELECTRICAL POWER PLAN
03 E-601	PUMP STATION NO. 3 - ELECTRICAL RISER DIAGRAMS
03 E-602	PUMP STATION NO.32 - EE-03 ELEVATION
03 E-603	PUMP STATION NO. 3 - WIRING SCHEMATICS
99 E-501	ELECTRICAL DETAILS I
99 E-502	ELECTRICAL DETAILS II
99 E-503	ELECTRICAL DETAILS III
INSTRUMENTATION	
00 DI-001	INSTRUMENTATION LEGEND, SYMBOLS AND GENERAL NOTES
00 DI-601	SYSTEM ARCHITECTURE
01 DI-601	PUMP STATION NO. 1 P&ID
01 DI-602	PUMP STATION NO. 1 ODOR CONTROL P&ID
02 DI-601	PUMP STATION NO. 2 P&ID
02 DI-602	PUMP STATION NO. 2 ODOR CONTROL P&ID
03 DI-601	PUMP STATION NO. 3 P&ID
03 DI-602	PUMP STATION NO. 3 ODOR CONTROL P&ID
99 DI-601	MISCELLANEOUS SIGNALS

AECOM

PROJECT

DOWNTOWN AREA COLLECTION SYSTEM AND PUMP STATIONS

CONTRACT No. 2019-02
SRF No. 4486

OWNER

TOWN OF ORLEANS, MA
19 SCHOOL ROAD
ORLEANS, MA 02653
(508) 240-3700

ENGINEER

AECOM TECHNICAL SERVICES, INC.
9 JONATHAN BOURNE DRIVE
POCASSET, MA 02559
PHONE: (508) 833-6950
www.aecom.com

REGISTRATION



ISSUE/REVISION

I/R	DATE	DESCRIPTION

PROJECT NUMBER

60587515

Designed By:	M. CURRAN
Drawn By:	M. CURRAN
Dept Check:	C. BENZIGER
Proj Check:	M. DONOGHUE
Date:	JANUARY 2020
Scale:	AS NOTED

DISCIPLINE

GENERAL

SHEET TITLE

INDEX OF DRAWINGS

SHEET NUMBER

00 G-002

Last saved by: CURRANM(2020-02-04) Last Plotted: 2020-02-04
Filename: L:\WORK\60476644 - ORLEANS DOWNTOWN SEWER\SHEETS\G00 G-002.DWG



Last saved by: CURRANM(2020-01-30) Last Plotted: 2020-02-04
Filename: L:\WORK\60476844 - ORLEANS DOWNTOWN SEWER\SHEETS\G\00 G-003.DWG

PUMP STATION DESIGNATION

01	PUMP STATION NO. 1
02	PUMP STATION NO. 2
03	PUMP STATION NO. 3

SHEET CODE

01 C-108

- SHEET NUMBER
- DISCIPLINE DESIGNATOR
- PUMP STATION TRIBUTARY

AECOM

PROJECT

DOWNTOWN AREA COLLECTION SYSTEM AND PUMP STATIONS

CONTRACT No. 2019-02
SRF No. 4486

OWNER

TOWN OF ORLEANS, MA
19 SCHOOL ROAD
ORLEANS, MA 02653
(508) 240-3700

ENGINEER

AECOM TECHNICAL SERVICES, INC.
9 JONATHAN BOURNE DRIVE
POCASSET, MA 02559
PHONE: (508) 833-6950
www.aecom.com

REGISTRATION

COMMONWEALTH OF MASSACHUSETTS
THOMAS E. PARECE
CIVIL
No. 34483
REGISTERED PROFESSIONAL ENGINEER

ISSUE/REVISION

I/R	DATE	DESCRIPTION

PROJECT NUMBER

60587515

Designed By:	**M. CURRAN**
Drawn By:	**M. CURRAN**
Dept Check:	**T. PARECE**
Proj Check:	**M. DONOGHUE**
Date:	**JANUARY 2020**
Scale:	**AS NOTED**

DISCIPLINE

GENERAL

SHEET TITLE

SHEET KEY PLAN

SHEET NUMBER

00 G-003

GENERAL NOTES

1. HORIZONTAL DATUM IN U.S. SURVEY FEET IS REFERENCED TO THE MASSACHUSETTS STATE PLANE, MAINLAND COORDINATE SYSTEM (NAD83).
2. VERTICAL DATUM IN U.S. SURVEY FEET IS REFERENCED TO THE NORTH AMERICAN VERTICAL DATUM OF 1988 (NAVD88).
3. THE INFORMATION SHOWN HEREON IS BASED ON THE REFERENCED DATA ACCUMULATION PLANS. THESE PLANS DO NOT REPRESENT A PROPERTY OR BOUNDARY SURVEY, AND THE PROPERTY LINES SHOWN DO NOT REPRESENT A LAND SURVEYOR'S PROPERTY BOUNDARY OPINION. THE BOUNDARY INFORMATION SHOWN ON THESE PLANS WAS COMPILED FROM OTHER MAPS, RECORD RESEARCH, AND OTHER SOURCES OF INFORMATION. THE BOUNDARIES SHOWN HEREON SHALL NOT BE CONSTRUED AS HAVING BEEN OBTAINED AS THE RESULT OF AN ACCURATE ON THE GROUND SURVEY, AND ARE SUBJECT TO CHANGE AS AN ACCURATE FIELD SURVEY MAY DISCLOSE.
4. SIDELINES OF RIGHTS OF WAY AND PROPERTY LINES ARE AS SHOWN ON PLANS PREPARED BY SMC SURVEYING AND MAPPING CONSULTANTS, ENTITLED: "EXISTING CONDITIONS SURVEY ORLEANS, MA, FOR TOWN OF ORLEANS, REVISED: NOVEMBER 28, 2016. WHERE SUPPLEMENTAL RIGHT OF WAY AND PROPERTY LINE INFORMATION WAS REQUIRED, TOWN OF ORLEANS AND/OR MASS GIS DATA WAS USED.
5. BUILDING LOCATIONS SHOWN HEREON ARE AS SHOWN ON PLANS PREPARED BY SMC SURVEYING AND MAPPING CONSULTANTS, ENTITLED: "EXISTING CONDITIONS SURVEY ORLEANS, MA, FOR TOWN OF ORLEANS, REVISED: NOVEMBER 28, 2016. UPDATED AND SUPPLEMENTAL BUILDING LOCATIONS ARE BASED ON PLANIMETRICS FROM JW SEWALL AERIAL SURVEY OF FEBRUARY 27, 2017.
6. SUPPLEMENTAL TOPOGRAPHIC SURVEY BY COASTAL ENGINEERING COMPANY, INC (CEC) IS BASED ON AERIAL SURVEY PERFORMED BY JW SEWALL AND SUPPLEMENTAL FIELD SURVEY BY CEC. CONTOUR DATA IS BASED UPON THE AERIAL SURVEY BY JW SEWALL, EXCEPT FOR ROADWAY AREAS WITHIN THE LIMITS OF THE SMC PLAN, AND THE ROUNDABOUT AT ROUTE 28 AND 6A. ELEVATIONS AND SITE FEATURES FOR ALL MAIN INTERIOR ROADWAYS WITHIN COVERAGE AREA ARE BASED ON PLANS BY SMC SURVEYING AND MAPPING CONSULTANTS, ENTITLED: "EXISTING CONDITIONS SURVEY ORLEANS, MA, FOR TOWN OF ORLEANS, REVISED: NOVEMBER 28, 2016.
7. LOCATION OF WATER, SEWER, TELEPHONE, ELECTRIC, AND GAS LINES ARE APPROXIMATE, BASED UPON RECORD LOCATION INFORMATION PROVIDED TO COASTAL ENGINEERING COMPANY, INC. AND FOR REFERENCE ONLY.
8. THE CONTRACTOR SHALL BE RESPONSIBLE FOR OBTAINING ALL NECESSARY PERMITS AT NO ADDITIONAL COST TO THE OWNER.
9. ALL CONSTRUCTION OPERATIONS SHALL BE ACCOMPLISHED IN ACCORDANCE WITH APPLICABLE STATE STATUES AND U.S. OCCUPATIONAL SAFETY AND HEALTH ADMINISTRATION REGULATIONS (O.S.H.A). COPIES OF O.S.H.A.'S STANDARDS MAY BE PURCHASED FROM THE U.S GOVERNMENT PRINTING OFFICE. THE CONTRACTOR ALONE WILL BE RESPONSIBLE FOR THE EXECUTION OF THE WORK IN ACCORDANCE WITH ALL APPLICABLE HEALTH AND SAFETY REQUIREMENTS.
10. THE CONTRACTOR SHALL HAVE A HEALTH AND SAFETY PLAN AND SHALL PROVIDE COPIES OF SAME TO THE ENGINEER.
11. THE CONTRACTOR SHALL TAKE ALL NECESSARY MEASURES AND SHALL PROVIDE ALL NECESSARY CONTINUOUS BARRIERS OF SUFFICIENT TYPE, SIZE AND STRENGTH TO PREVENT ACCESS TO ALL OPEN EXCAVATIONS AT THE COMPLETION OF EACH DAY'S WORK.
12. CONTRACTOR SHALL FOLLOW ALL REQUIREMENTS OF THE LOCAL MUNICIPALITY AND THE STATE WHEN WORKING IN THEIR RIGHTS OF WAY.
13. NO WORK, STORAGE, OR TRESPASS SHALL BE PERMITTED BEYOND THE BOUNDARIES OF ANY EASEMENTS WITHOUT WRITTEN PERMISSION OF THE PROPERTY OWNER.
14. ALL CONSTRUCTION ACTIVITY SHALL BE CONFINED TO THE AREA WITHIN THE LIMIT OF WORK AS SHOWN ON THE PLANS. LIMIT OF WORK SHALL BE DEFINED AS THE SERVICE RECIPIENTS PROPERTY LINE AND THE ADJACENT RIGHT-OF-WAY. RIGHTS OF ENTRY AND/OR EASEMENTS HAVE BEEN OBTAINED FOR ALL PROPERTIES INCLUDED IN THIS PROJECT.
15. THE CONTRACTOR SHALL BE RESPONSIBLE FOR SECURING A SITE FOR DISPOSAL OF ALL EXCAVATED UNACCEPTABLE MATERIAL THAT IS UNSUITABLE FOR USE AS BACKFILL AND ALL OTHER EXCESS EXCAVATED MATERIALS. THE CONTRACTOR SHALL PROVIDE THE ENGINEER WITH THE LOCATION OF THE DISPOSAL SITE AND WRITTEN PERMISSION FOR USE OF THE SITE FROM THE PROPERTY OWNER. THE COST FOR SECURING AND MAINTAINING THE DISPOSAL SITE SHALL BE THE CONTRACTOR'S RESPONSIBILITY.
16. IF AT ANY TIME THE CONSTRUCTION EXCAVATION REVEALS ANY ARTICLE OF HISTORIC OR ARCHEOLOGICAL SIGNIFICANCE, WORK AT THE LOCATION WILL CEASE AND THE CONTRACTOR SHALL IMMEDIATELY NOTIFY THE ENGINEER.
17. THE CONTRACTOR SHALL COORDINATE ALL WORK AS NECESSARY WITH MASSDOT AND THE TOWN OF ORLEANS AND/OR ITS REPRESENTATIVES.
18. WORKING HOURS WITHIN THE TOWN ARE 7:00 A.M. TO 5:00 P.M., MONDAY THROUGH FRIDAY OR AS SPECIFIED IN THE MASSDOT PERMIT AND SPECIFICATIONS. PERMISSION IS REQUIRED FROM THE TOWN VIA THE ENGINEER TO WORK ON SUNDAY, LEGAL HOLIDAYS, OR ANY WEEKDAY NIGHT PAST THE HOURS SPECIFIED. THIS PERMISSION MUST BE REQUESTED 72 HOURS IN ADVANCE. SUNDAY WORK WILL ONLY BE ALLOWED IN CASE OF EMERGENCY.
19. EXISTING VALVES OR HYDRANTS SHALL BE OPERATED BY THE MUNICIPAL OWNER. THE CONTRACTOR SHALL COORDINATE WITH THE MUNICIPAL OWNER OF THE WATER SYSTEM.
20. THE CONTRACTOR IS RESPONSIBLE FOR PERFORMING ALL WORK AS INDICATED ON THE DRAWINGS, IN THE SPECIFICATIONS AND AS DIRECTED BY THE ENGINEER IN CONFORMANCE WITH ALL APPLICABLE CODES AND IN A PROPER AND WORKMANLIKE MANNER.
21. CONTRACTOR TO SUBMIT WORK SCHEDULE INCLUDING NECESSARY UTILITY RELOCATIONS BASED ON RESULTS OF TEST PITS. NO PIPE INSTALLATION SHALL OCCUR PRIOR TO APPROVAL OF THE SCHEDULE AND COMPLETION OF TEST PITS.
22. THE CONTRACTOR IS RESPONSIBLE FOR SEQUENCING OF ALL WORK TO AVOID CONFLICTS BETWEEN ALL NEW WORK.
23. THE CONTRACTOR SHALL PREPARE AND SUBMIT A TRAFFIC MANAGEMENT PLAN FOR ALL WORK PRIOR TO THE START OF CONSTRUCTION TO SHOW HOW TRAFFIC FLOW WILL BE MAINTAINED DURING CONSTRUCTION. THE CONTRACTOR SHALL FURNISH ALL PROTECTIVE AND/OR WARNING DEVICES AS REQUIRED TO CONTROL TRAFFIC AND PROTECT THE PUBLIC IN ALL WORK AREAS.
24. ALL SIGNAGE AND PAVEMENT MARKINGS SHALL BE IN ACCORDANCE WITH LOCAL AND STATE GUIDELINES.
25. THE CONTRACTOR SHALL MAINTAIN EMERGENCY ACCESS TO ALL AREAS AFFECTED BY THE WORK AT ALL TIMES. THE CONTRACTOR IS RESPONSIBLE FOR PROVIDING AN EMERGENCY RESPONSE PLAN. THIS PLAN SHALL BE COORDINATED WITH THE ENGINEER, THE TOWN AND ALL EMERGENCY DEPARTMENTS.
26. PRIOR TO CLOSING ANY ROADWAY (PARTIALLY OR COMPLETELY), MUNICIPAL POLICE, THE TOWN AND LOCAL FIRE OFFICIALS SHALL BE NOTIFIED. THE CONTRACTOR SHALL COMPLY WITH ANY CONDITIONS SET BY THE PUBLIC SAFETY OFFICIALS, IN CONJUNCTION WITH THE OWNER AND ENGINEER.
27. CONTRACTOR TO PROVIDE AND MAINTAIN SEDIMENTATION AND EROSION CONTROL MEASURES TO PROTECT ALL CATCH BASINS, DRAINAGE INLETS AND SWALES IN THE CONSTRUCTION ZONE.
28. ALL EROSION CONTROL MEASURES FOR THE WORK ZONE SHALL BE IN PLACE PRIOR TO THE START OF CONSTRUCTION.
29. THE CONTRACTOR IS RESPONSIBLE FOR THE PROTECTION OF THE EXISTING FEATURES AND STRUCTURES WITHIN AND ADJACENT TO THE WORK. CONTRACTOR SHALL BOX ALL TREES, SHRUBS, FLOWER BOXES, AND HEDGES BEFORE PLACING EARTH AGAINST OR NEAR THEM. IN THE EVENT OF DAMAGE, REPAIRS OR REPLACEMENT SHALL BE COMPLETED AT THE CONTRACTOR'S EXPENSE AS APPROVED BY THE ENGINEER.
30. EXCAVATION OF ANY TYPE SHALL BE ACCOMPLISHED IN SUCH A MANNER THAT UNDERGROUND UTILITIES OR STRUCTURES ARE NOT DAMAGED. ALL ROADWAYS, PARKING AREAS, SIDEWALKS AND OTHER STRUCTURES DISTURBED BY CONSTRUCTION IN OR OUTSIDE THE PROJECT AREA SHALL BE RETURNED TO THEIR ORIGINAL CONDITION OR BETTER. ALL COSTS RELATED TO THE REPAIR OF DAMAGED UTILITIES OR STRUCTURES SHALL BE BORNE BY THE CONTRACTOR.
31. CONTRACTOR SHALL SAW-CUT ALL PAVEMENT, ROADS, AND DRIVEWAYS TO BE DISTURBED DURING CONSTRUCTION.
32. THE CONTRACTOR IS RESPONSIBLE FOR MAINTAINING PROPER AND ADEQUATE TRENCH SHORING AND BRACING AT ALL TIMES IN ACCORDANCE WITH REQUIRED SAFETY STANDARDS.
33. THE CONTRACTOR SHALL FIELD VERIFY THE LOCATION OF EXISTING SEWER SERVICE CONNECTIONS PRIOR TO CONSTRUCTING REPLACEMENT SERVICE CONNECTIONS WHEN REQUIRED.
34. IT SHALL BE THE CONTRACTOR'S RESPONSIBILITY TO VERIFY ALL EXISTING CONDITIONS AT EACH SITE RECEIVING SEWER SERVICE, INCLUDING BUT NOT LIMITED TO, INVERT ELEVATIONS AT EACH MANHOLE, DEPTH AND LOCATION OF EXISTING PIPING TO ON-SITE WASTE DISPOSAL SYSTEMS (OWDS) AND THE LOCATION OF EXISTING OWDS.
35. ALL NEW GRAVITY SEWER SERVICES SHALL BE 6" DIAMETER PVC UNLESS OTHERWISE NOTED. ALL NEW LOW PRESSURE SEWER SERVICES SHALL BE 1-1/4" DIAMETER UNLESS OTHERWISE NOTED
36. ALL NEW PRECAST SEWER MANHOLE INVERTS ARE TO BE CONSTRUCTED IN ACCORDANCE WITH DETAILS.

GENERAL NOTES - (CONT.)

37. ALL UNEXCAVATED ROCK WITHIN 3'-0" HORIZONTALLY OF THE ENDS OF BUILDING CONNECTIONS, BRANCHES AND STUBS, AND DOWN TO A HORIZONTAL PLANE 6-INCHES BELOW THE BOTTOMS OF SUCH CONNECTIONS, BRANCHES AND STUBS, SHALL BE REMOVED.
38. ROCK REMOVAL BY THE MECHANICAL METHOD SHALL CONSIST OF CUTTING AWAY ROCK AT TRENCH BOTTOM TO FORM A LEVEL BEARING SURFACE 6" BELOW INVERT ELEVATION OF PIPE.
39. NO TREES OR TREE LIMBS ALONG THE ENTIRE ROUTE OF CONSTRUCTION ON PUBLIC WAYS SHALL BE CUT UNLESS OTHERWISE DIRECTED BY THE ENGINEER AND APPROVED BY THE TOWN.
40. THE CONTRACTOR SHALL EXERCISE CARE TO PREVENT DAMAGE TO ROOT SYSTEMS OF EXISTING TREES OR SHRUBS IN LOCATIONS OF NEW SEWER LINES.
41. THE LOCATIONS OF UTILITIES SHOWN ON THESE PLANS ARE APPROXIMATE. THE CONTRACTOR SHALL COORDINATE WITH THE TOWN AND UTILITY COMPANIES INVOLVED TO VERIFY IN THE FIELD THE EXACT LOCATION, SIZE, AND MATERIAL OF CONSTRUCTION OF MAINS AND SERVICES TO PREVENT DAMAGE, LOSS OF SERVICE DURING CONSTRUCTION AND FOR REPLACEMENT OF SERVICES. THE CONTRACTOR SHALL NOTIFY "DIG SAFE" 72-HOURS PRIOR TO ANY EXCAVATION.
42. THE CONTRACTOR IS RESPONSIBLE TO VERIFY THE DEPTH OF EXISTING UTILITY CROSSINGS EITHER BELOW OR ABOVE THE NEW PIPING. METHODS FOR DETERMINING DEPTHS TO UTILITIES WILL BE BY TEST PITS OR BY VACUUM EXCAVATION, WHICHEVER IS DEEMED ACCEPTABLE AT THE SPECIFIC LOCATION.
43. EXISTING UTILITIES TO REMAIN IN SERVICE DURING CONSTRUCTION. ANY INTERRUPTION OF SERVICE SHALL BE COORDINATED WITH THE ENGINEER AND APPROVED BY THE TOWN.
44. EXISTING UTILITIES INTERFERING WITH THE WORK SHALL BE RELOCATED AS DIRECTED BY THE ENGINEER.
45. THE CONTRACTOR IS RESPONSIBLE FOR MAKING ALL ARRANGEMENTS FOR ANCHORING, SUPPORTING AND/OR RELOCATING AND PROTECTING ALL UTILITIES DURING CONSTRUCTION. ALL COSTS SHALL BE INCLUDED IN THE UNIT PRICES BID. IN THE EVENT OF DAMAGE, THE CONTRACTOR SHALL BE RESPONSIBLE FOR THE COST OF ALL REPAIRS.
46. THE CONTRACTOR SHALL MAINTAIN ACCESS TO ALL EXISTING FIRE HYDRANTS AT ALL TIMES. SHOULD AN EXISTING HYDRANT NEED TO BE TAKEN OUT OF SERVICE, THE CONTRACTOR SHALL NOTIFY THE LOCAL FIRE DEPARTMENT 24 HOURS PRIOR TO TAKING IT OUT OF SERVICE.
47. IF WATER MAINS NEED TO BE RE-LAYED AS A RESULT OF NEW PIPELINE CONSTRUCTION, THE WATER MAINS SHALL BE LAID A MINIMUM OF 10-FEET HORIZONTALLY FROM AN EXISTING SEWER OR STORM SEWER, UNLESS OTHERWISE DIRECTED BY THE ENGINEER. WHEN WATER MAINS MUST CROSS ABOVE A SEWER, THE WATER MAIN SHALL BE LAID AT SUCH AN ELEVATION THAT THE TOP OF THE SEWER IS AT LEAST 18-INCHES BELOW THE BOTTOM OF THE WATER MAIN. WHERE RE-LAYED WATER MAINS ARE SHOWN TO CROSS SEWERS, THE RE-LAYED WATER MAIN SHALL BE INSTALLED SO THAT A FULL LENGTH OF WATER MAIN CROSSES THE SEWER MIDWAY BETWEEN THE JOINTS OF THE WATER MAIN.
48. CONTRACTOR SHALL MAKE HIS OWN ARRANGEMENTS TO OBTAIN WATER FOR FLUSHING, CHLORINATION, AND TESTING. THE CONTRACTOR SHALL BE RESPONSIBLE FOR LOCATING, FURNISHING, INSTALLING, AND REMOVING ALL NECESSARY MATERIAL (TAPS, CORPORATIONS, AND SERVICE PIPE) REQUIRED FOR PROPER TESTING AND CHLORINATION OF WATER MAINS.
49. AFTER TESTING, ALL CORPORATIONS INSTALLED FOR TESTING AND CHLORINATION SHALL BE REMOVED AND REPLACED WITH BRASS PLUGS. WATER TIGHTNESS OF BRASS PLUGS SHALL BE OBSERVED VISUALLY UNDER PRESSURE.
50. ALL ROAD CUTS SHALL BE RESTORED WITH SUB-BASE MATERIAL AT THE END OF EACH WORK DAY. CONTRACTOR SHALL MAINTAIN ROAD CUTS UNTIL THE TEMPORARY/PERMANENT PAVEMENT IS INSTALLED.
51. TEMPORARY TRENCH PAVEMENT SHALL BE INSTALLED AT THE END OF EACH WEEK AND AS REQUIRED BY MASSDOT UNLESS OTHERWISE DIRECTED BY THE OWNER. PERMANENT TRENCH PAVEMENT SHALL BE INSTALLED 90 TO 180 DAYS AFTER PIPELINE INSTALLATION UNLESS OTHERWISE DIRECTED BY THE OWNER.
52. THE CONTRACTOR SHALL RESTORE ALL DISTURBED AREAS TO PRE-CONSTRUCTION GRADES UPON COMPLETION OF SEWER CONSTRUCTION, EXCEPT WHERE PERMANENT GRADE CHANGES ARE SPECIFICALLY NOTED OR ORDERED.
53. ALL ROADS AND DRIVEWAYS SHALL BE REPLACED TO COMPLY WITH THE MASSDOT AND TOWN OF ORLEANS SPECIFICATIONS AS APPLICABLE.
54. ALL PAVED GUTTERS (ASPHALT WING), ALL STONE CURBS, AND ALL CONCRETE CURB ALONG ROADWAYS DISTURBED BY CONSTRUCTION SHALL BE REPLACED IN KIND AT NO ADDITIONAL COST TO THE OWNER.
55. ALL EXISTING FRAMES, COVERS, BOXES, ETC. SHALL BE RAISED TO FINISH GRADES PRIOR TO PLACEMENT OF PAVEMENT WEARING COURSE.
56. THE CONTRACTOR SHALL REMOVE AND DISPOSE OF ALL WASTE BUILDING MATERIAL, CONCRETE, MASONRY, TREES, SHRUBS, DEBRIS AND OTHER MATERIALS NECESSARY FOR THE SATISFACTORY COMPLETION OF THE WORK AND AS REQUIRED BY THE OWNER. CONSTRUCTION DEBRIS SHALL BE DISPOSED OF IN STRICT ACCORDANCE WITH ALL APPLICABLE LOCAL, STATE AND FEDERAL LAWS.
57. THE CONTRACTOR SHALL BE RESPONSIBLE FOR CONTINUOUS CLEANING OF MUD, DIRT AND DEBRIS OFF STREETS, WHEN SUCH MUD, DIRT OR DEBRIS IS DEPOSITED THERE AS A RESULT OF HIS CONSTRUCTION ACTIVITY. ANY DEBRIS, MUD, OR DELETERIOUS MATERIAL FROM THE PROJECT WILL BE REMOVED FROM THE STREET AND SURROUNDING STREETS BY CONTRACTOR AT THE END OF EACH WORKING DAY, OR BEFORE, IF DIRECTED BY THE OWNER OR ENGINEER.
58. USE WATER SPRINKLING, TEMPORARY ENCLOSURES AND OTHER SUITABLE METHODS TO LIMIT DUST AND DIRT RISING AND SCATTERING IN THE AIR.
59. CONTRACTOR IS RESPONSIBLE FOR REPLACING ALL EXISTING PAVEMENT MARKINGS INCLUDING CENTER LINES, EDGE LINES, STOP LINES, CROSSLANES AND LETTERING FOLLOWING RESTORATION OF PAVEMENT OR AS DIRECTED BY THE ENGINEER.

ABBREVIATIONS

B.B.	BITUMINOUS BERM
BIT. CURB	BITUMINOUS CURB
BIT. CONC.	BITUMINOUS CONCRETE
B.O.E.	BOTTOM OF EXPLORATION
BM	BENCH MARK
CB	CATCH BASIN
CI	CAST IRON
CICL	CEMENT LINED CAST IRON
CMP	CORRUGATED METAL PIPE
CONC.	CONCRETE
CONN.	CONNECT
CS	CARBON STEEL
DI	DUCTILE IRON
DICL	DUCTILE IRON CEMENT LINED
DMH	DRAINAGE MANHOLE
DOE	DEPTH OF EXPLORATION
DYL	DOUBLE YELLOW LINE
ELEC	ELECTRICAL
EL	ELEVATION
EOP	EDGE OF PAVEMENT
EP	EXISTING PAVEMENT
EXIST.	EXISTING
FT	FEET
FM	FORCE MAIN
G	GAS
GAR	GARAGE
GC	GRANITE CURB
HDPE	HIGH DENSITY POLYETHYLENE
INV	INVERT
LP	LOW PRESSURE
LSA	LANDSCAPED AREA
MB	MAIL BOX
MIN	MINIMUM
NTS	NOT TO SCALE
PL	PLASTIC
PVC	POLYVINYL CHLORIDE
PVMT	PAVEMENT
PWW	PAVED WATERWAY
R	RIM
RCP	REINFORCED CONCRETE PIPE
S	SLOPE
SMH	SEWER MANHOLE
SWL	SINGLE WHITE LINE
SYL	SINGLE YELLOW LINE
STA	STATION
TBM	TEMPORARY BENCHMARK
TMH	TELEPHONE MANHOLE
T.O.P.	TOP OF PIPE
TRANS	TRANSFORMER
TYP	TYPICAL
UE	UNDERGROUND ELECTRIC
UP	UTILITY POLE
VCP	VITRIFIED CLAY PIPE
WTFC	WATERTIGHT FRAME AND COVER
W/	WITH
WF	WETLAND FLAG

LEGEND

EXISTING		NEW	
CBDH	CONCRETE BOUND WITH DRILL HOLE	S	SEWER MANHOLE
CB	CONCRETE BOUND		CATCH BASIN SEDIMENTATION CONTROL
MHB	MASS HIGHWAY BOUND		TEST PIT
IRF	IRON ROD FOUND	2+00	STATIONING
	ROUND CATCH BASIN		GRAVITY SEWER
	CATCH BASIN		SEWER SERVICE LINE
	DOUBLE CATCH BASIN		SEWER FORCEMAIN
	CULVERT		PROJECT PAVEMENT RESTORATION LIMITS
	DRAIN MANHOLE		EROSION PROTECTION
	DRAINAGE HEADWALL		
S	SEWER MANHOLE		
DS	DISPOSAL SYSTEM COVER		
	CESSPOOL		
	ELECTRIC BOX		
E	ELECTRIC MANHOLE		
	GAS VALVE		
	TELEPHONE BOX		
T	TELEPHONE MANHOLE		
	WATER GATE		
	IRRIGATION CONTROL VALVE		
	FIRE HYDRANT		
	UTILITY POLE WITH RISER		
	UTILITY POLE		
	UTILITY POLE WITH LIGHT		
	UTILITY POLE WITH LIGHT AND RISER		
	UTILITY POLE WITH TRANSFORMER		
	GUY		
	DECIDUOUS TREE		
	CONIFER TREE		
	SHRUB		
	SIGN (SINGLE POSTED)		
	SIGN (DOUBLE POSTED)		
TS	TRAFFIC SIGNAL		
	POST		
MW	MONITORING WELL		
B-X	BORING LOCATION AND ID		
	LIGHT POLE		
	FLAG POLE		
FDC	FIRE DEPARTMENT CONNECTION		
	VENT		
108.6+ WF-X	SPOT ELEVATION		
	WETLAND FLAG		
	WETLAND 100' BUFFER		
	PROPERTY LINE		
	FENCE		
S	SEWER LINE		
FM	SEWER FORCEMAIN		
D	DRAIN LINE		
W	WATER LINE		
G	GAS LINE		
UGE	UNDERGROUND ELECTRIC		
UGC	UNDERGROUND CABLE		
T	TELEPHONE LINE		
OHW	OVERHEAD WIRES		
52	INTERMEDIATE CONTOURS		
50	INDEX CONTOURS		
	EXISTING TREELINE		
	100 YR FLOOD EXTENT		
	WETLAND		
	WETLAND AND COASTAL BANK BUFFERS		
	BUILDING		

AECOM

PROJECT

DOWNTOWN AREA COLLECTION SYSTEM AND PUMP STATIONS

CONTRACT No. 2019-02
SRF No. 4486

OWNER

TOWN OF ORLEANS, MA
19 SCHOOL ROAD
ORLEANS, MA 02653
(508) 240-3700

ENGINEER

AECOM TECHNICAL SERVICES, INC.
9 JONATHAN BOURNE DRIVE
POCASSET, MA 02559
PHONE: (508) 833-6950
www.aecom.com

REGISTRATION

COMMONWEALTH OF MASSACHUSETTS
THOMAS E. PARECE
CIVIL
No. 34463
REGISTERED PROFESSIONAL ENGINEER

ISSUE/REVISION

I/R	DATE	DESCRIPTION

PROJECT NUMBER

60587515

Designed By:	M. DONOGHUE
Drawn By:	M. CURRAN
Dept Check:	C. BENZIGER
Proj Check:	M. DONOGHUE
Date:	JANUARY 2020
Scale:	AS NOTED

DISCIPLINE

CIVIL

SHEET TITLE

GENERAL NOTES, LEGENDS AND ABBREVIATIONS

SHEET NUMBER

00 C-001

Last saved by: CURRANM(2020-01-30) Last Plotted: 2020-02-04
Filename: L:\WORK\60476644 - ORLEANS DOWNTOWN SEWER\SHEETS\C00 C-001.DWG

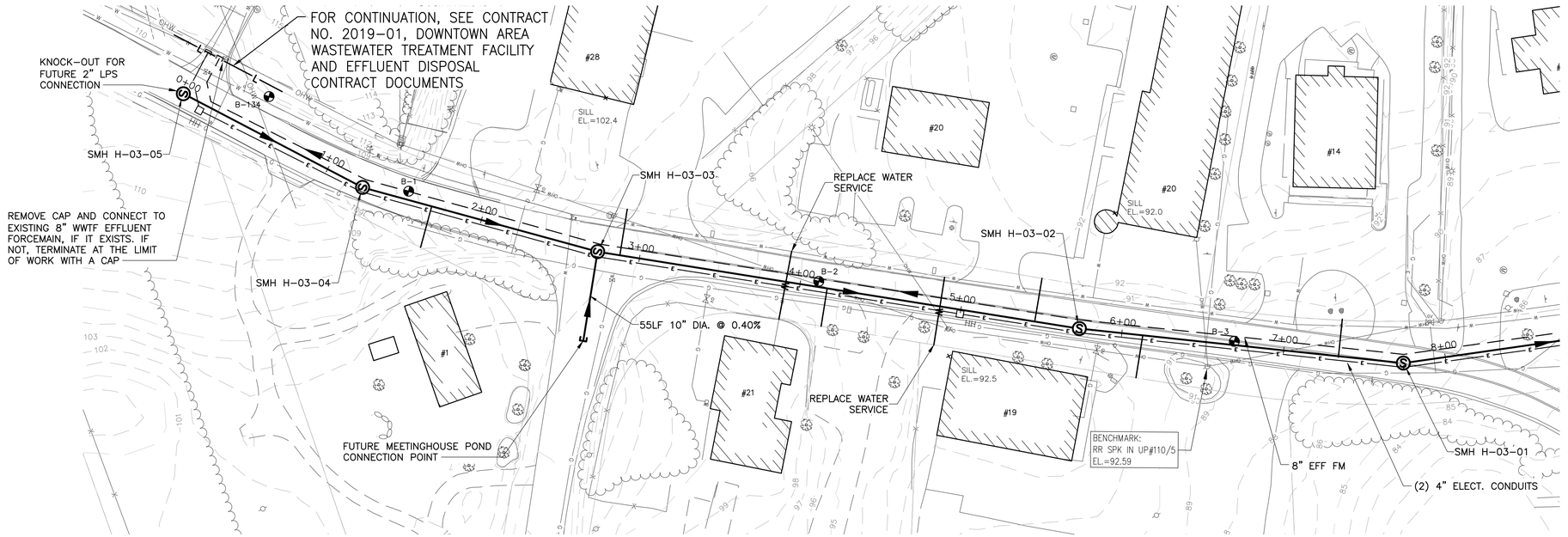

PLAN - LOTS HOLLOW ROAD

SCALE: 1"=40'

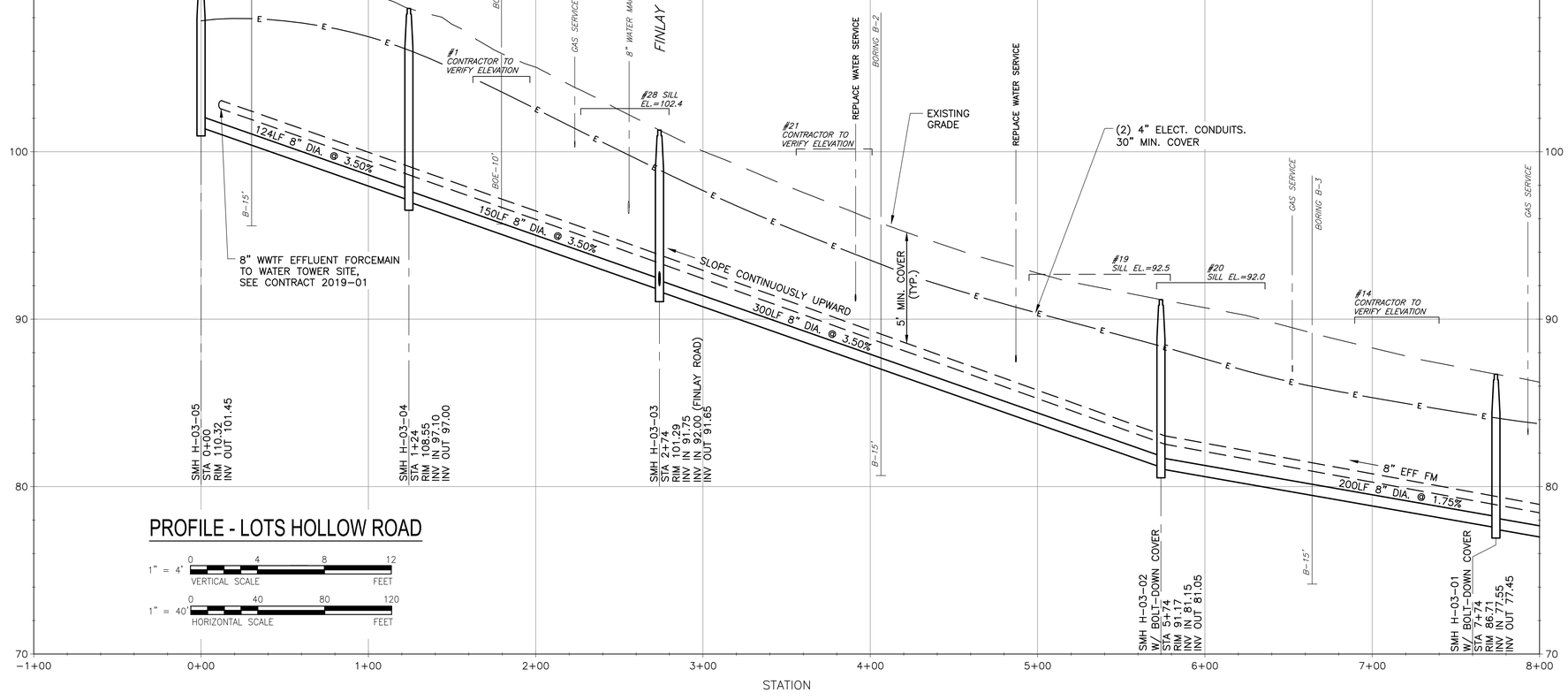

PROFILE - LOTS HOLLOW ROAD

1" = 4' VERTICAL SCALE (0, 4, 8, 12 FEET)

1" = 40' HORIZONTAL SCALE (0, 40, 80, 120 FEET)

AECOM

PROJECT

DOWNTOWN AREA COLLECTION SYSTEM AND PUMP STATIONS

CONTRACT No. 2019-02
SRF No. 4486

OWNER

TOWN OF ORLEANS, MA
19 SCHOOL ROAD
ORLEANS, MA 02653
(508) 240-3700

ENGINEER

AECOM TECHNICAL SERVICES, INC.
9 JONATHAN BOURNE DRIVE
POCASSET, MA 02559
PHONE: (508) 833-6950
www.aecom.com

REGISTRATION

COMMONWEALTH OF MASSACHUSETTS
THOMAS E. PARECE
CIVIL
No. 34463
REGISTERED PROFESSIONAL ENGINEER
01/10/2020

ISSUE/REVISION

I/R	DATE	DESCRIPTION

PROJECT NUMBER

60587515

Designed By:	M. CURRAN
Drawn By:	M. CURRAN
Dept Check:	T. PARECE
Proj Check:	M. DONOGHUE
Date:	JANUARY 2020
Scale:	AS NOTED

DISCIPLINE

CIVIL

SHEET TITLE

PLAN AND PROFILE SEWER LOTS HOLLOW ROAD I

SHEET NUMBER

01 C-101

Last saved by: CURRANM(2020-02-03) Last Plotted: 2020-02-04
Filename: L:\WORK\60478644 - ORLEANS DOWNTOWN SEWER\C3D - DOWNTOWN_SOURCE DRAWINGS\PS-1 - DOWNTOWN.DWG

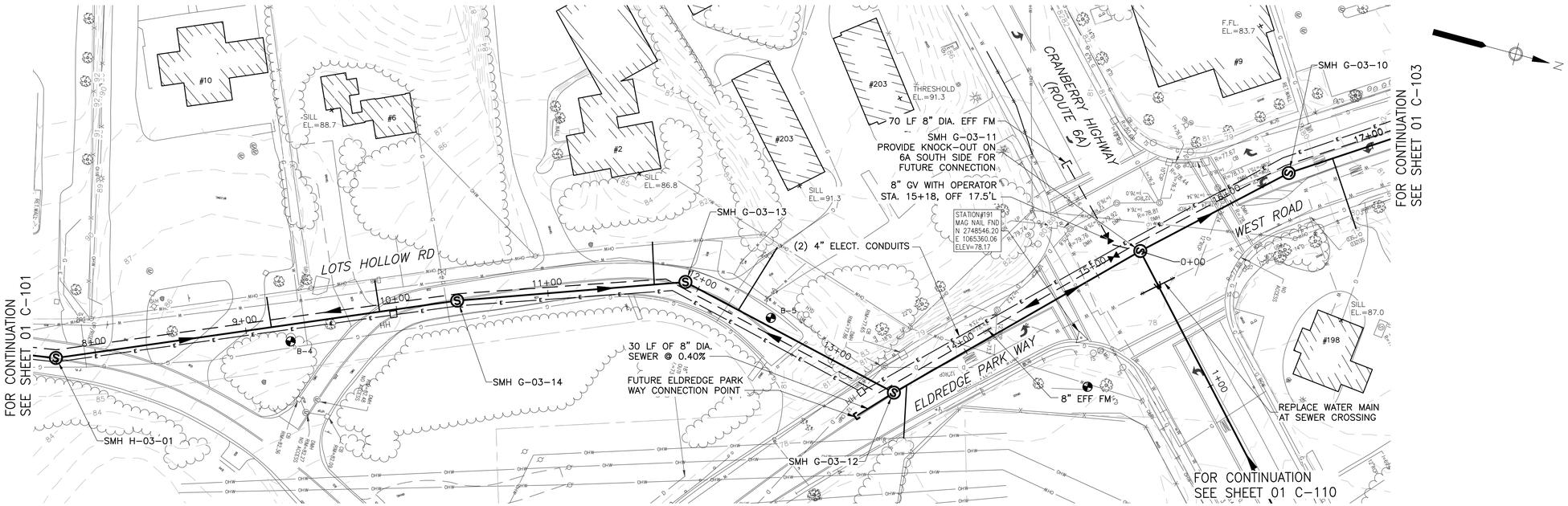

PLAN - LOTS HOLLOW ROAD

SCALE: 1"=40'

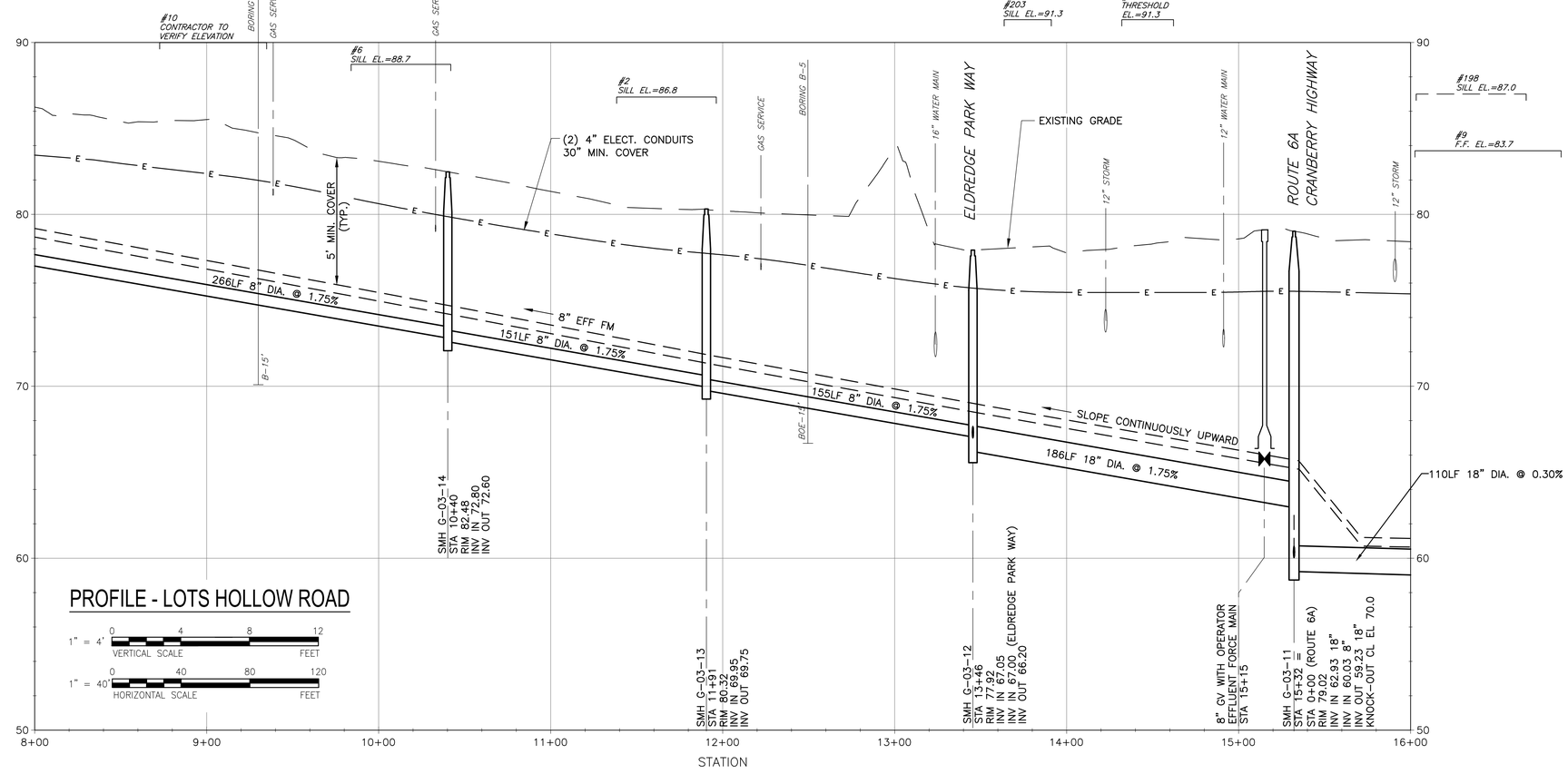

PROFILE - LOTS HOLLOW ROAD

1" = 4' VERTICAL SCALE: 0, 4, 8, 12 FEET

1" = 40' HORIZONTAL SCALE: 0, 40, 80, 120 FEET

AECOM

PROJECT

DOWNTOWN AREA
COLLECTION SYSTEM
AND PUMP STATIONS

CONTRACT No. 2019-02
SRF No. 4486

OWNER

TOWN OF ORLEANS, MA

19 SCHOOL ROAD
ORLEANS, MA 02653
(508) 240-3700

ENGINEER

AECOM TECHNICAL SERVICES, INC.
9 JONATHAN BOURNE DRIVE
POCASSET, MA 02559
PHONE: (508) 833-6950
www.aecom.com

REGISTRATION

COMMONWEALTH OF MASSACHUSETTS
THOMAS E. PARECE
CIVIL
No. 34493
REGISTERED PROFESSIONAL ENGINEER

ISSUE/REVISION

I/R	DATE	DESCRIPTION

PROJECT NUMBER

60587515

Designed By:	M. CURRAN
Drawn By:	M. CURRAN
Dept Check:	T. PARECE
Proj Check:	M. DONOGHUE
Date:	JANUARY 2020
Scale:	AS NOTED

DISCIPLINE

CIVIL

SHEET TITLE

PLAN AND PROFILE SEWER
LOTS HOLLOW ROAD II

SHEET NUMBER

01 C-102

Last saved by: CURRANM(2020-02-03) Last Plotted: 2020-02-04
Filename: L:\WORK\60476644 - ORLEANS DOWNTOWN SEWER\C3D - DOWNTOWN_SOURCE DRAWINGS\PS-1 - DOWNTOWN.DWG

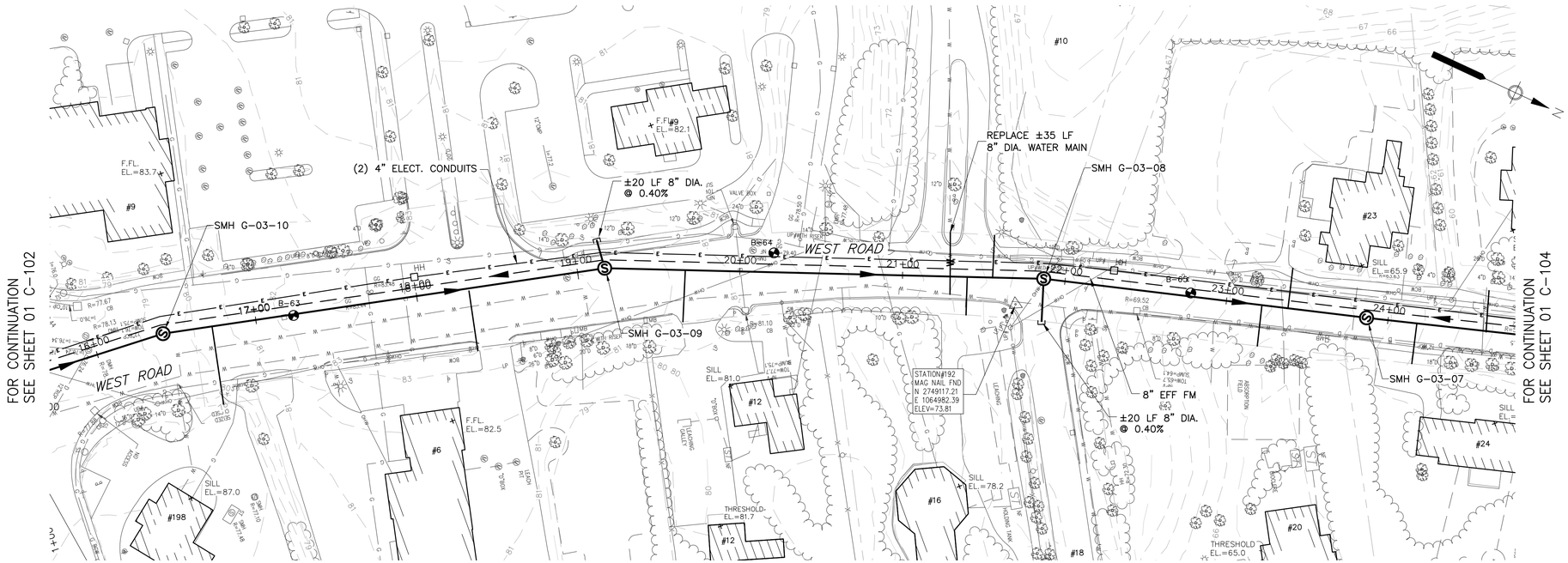

PLAN - WEST ROAD

SCALE: 1"=40'

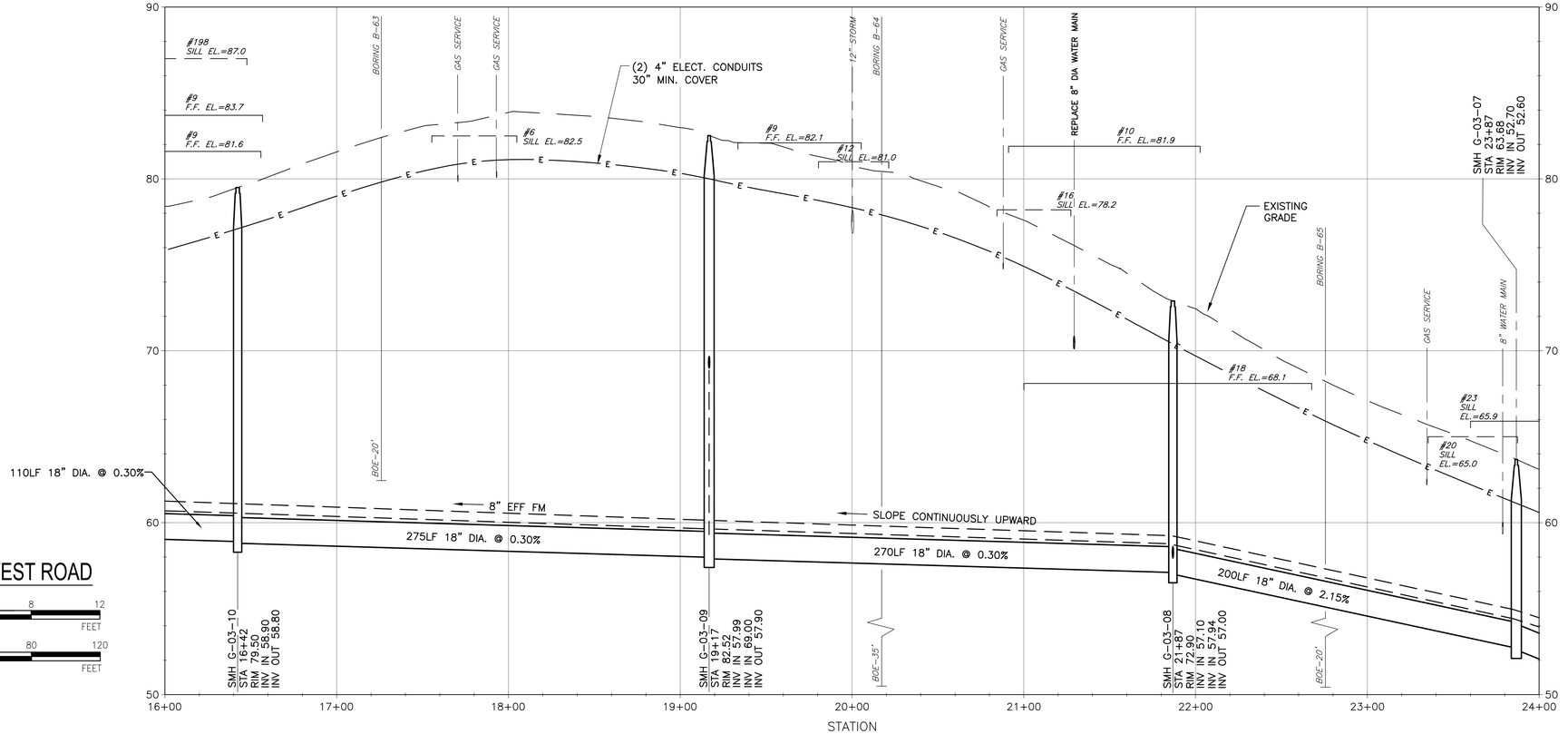

PROFILE - WEST ROAD

1" = 4' VERTICAL SCALE 0 4 8 12 FEET

1" = 40' HORIZONTAL SCALE 0 40 80 120 FEET

Last saved by: CURRANM(2020-02-03) Last Plotted: 2020-02-24
Filename: L:\WORK\60476644 - ORLEANS DOWNTOWN SEWER\C3D - DOWNTOWN_SOURCE DRAWINGS\PS-1 - DOWNTOWN.DWG

AECOM

PROJECT

DOWNTOWN AREA COLLECTION SYSTEM AND PUMP STATIONS

CONTRACT No. 2019-02
SRF No. 4486

OWNER

TOWN OF ORLEANS, MA
19 SCHOOL ROAD
ORLEANS, MA 02653
(508) 240-3700

ENGINEER

AECOM TECHNICAL SERVICES, INC.
9 JONATHAN BOURNE DRIVE
POCASSET, MA 02559
PHONE: (508) 833-6950
www.aecom.com

REGISTRATION

COMMONWEALTH OF MASSACHUSETTS
THOMAS E. PARECE
CIVIL
No. 34463
REGISTERED PROFESSIONAL ENGINEER
2020

ISSUE/REVISION

I/R	DATE	DESCRIPTION

PROJECT NUMBER

60587515

Designed By:	M. CURRAN
Drawn By:	M. CURRAN
Dept Check:	T. PARECE
Proj Check:	M. DONOGHUE
Date:	JANUARY 2020
Scale:	AS NOTED

DISCIPLINE

CIVIL

SHEET TITLE

PLAN AND PROFILE SEWER WEST ROAD I

SHEET NUMBER

01 C-103

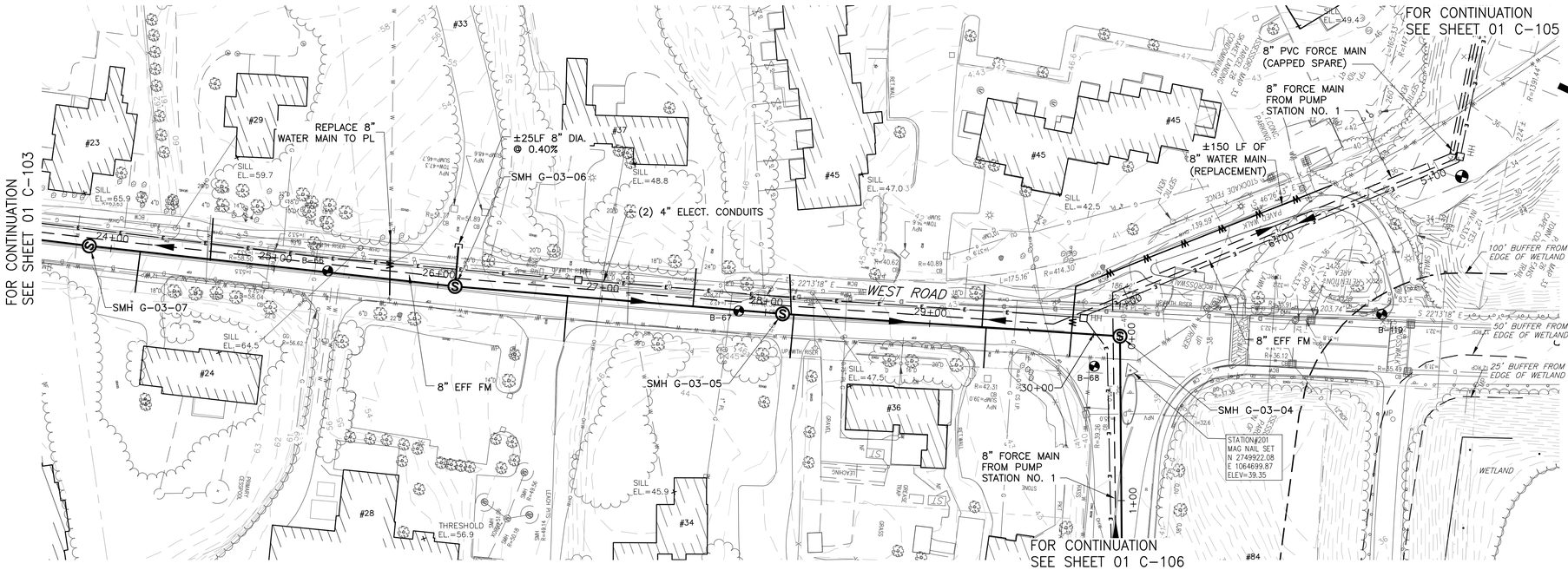

PLAN - WEST ROAD

SCALE: 1"=40'

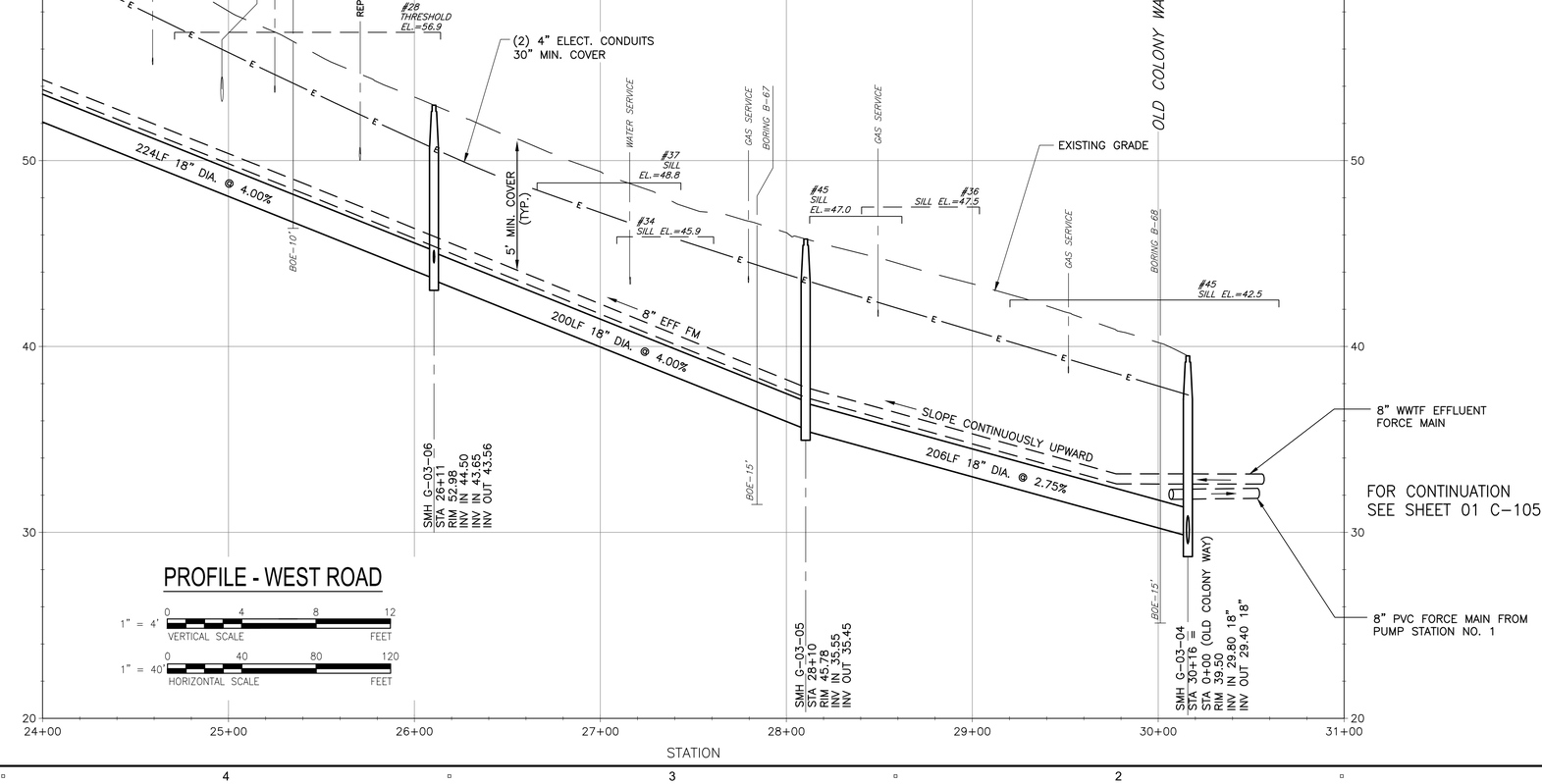

PROFILE - WEST ROAD

1" = 4' VERTICAL SCALE (0, 4, 8, 12 FEET)

1" = 40' HORIZONTAL SCALE (0, 40, 80, 120 FEET)

Last saved by: CURRANM (2020-02-03) Last Plotted: 2020-02-04
Filename: L:\WORK\60476644 - ORLEANS DOWNTOWN SEWER\C3D - DOWNTOWN_SOURCE DRAWINGS\PS-1 - DOWNTOWN.DWG

AECOM

PROJECT

DOWNTOWN AREA COLLECTION SYSTEM AND PUMP STATIONS

CONTRACT No. 2019-02
SRF No. 4486

OWNER

TOWN OF ORLEANS, MA
19 SCHOOL ROAD
ORLEANS, MA 02653
(508) 240-3700

ENGINEER

AECOM TECHNICAL SERVICES, INC.
9 JONATHAN BOURNE DRIVE
POCASSET, MA 02559
PHONE: (508) 833-6950
www.aecom.com

REGISTRATION

COMMONWEALTH OF MASSACHUSETTS
THOMAS E. PARECE
CIVIL
No. 34463
REGISTERED PROFESSIONAL ENGINEER

ISSUE/REVISION

I/R	DATE	DESCRIPTION

PROJECT NUMBER

60587515

Designed By:	M. CURRAN
Drawn By:	M. CURRAN
Dept Check:	T. PARECE
Proj Check:	M. DONOGHUE
Date:	JANUARY 2020
Scale:	AS NOTED

DISCIPLINE

CIVIL

SHEET TITLE

PLAN AND PROFILE SEWER WEST ROAD II

SHEET NUMBER

01 C-104

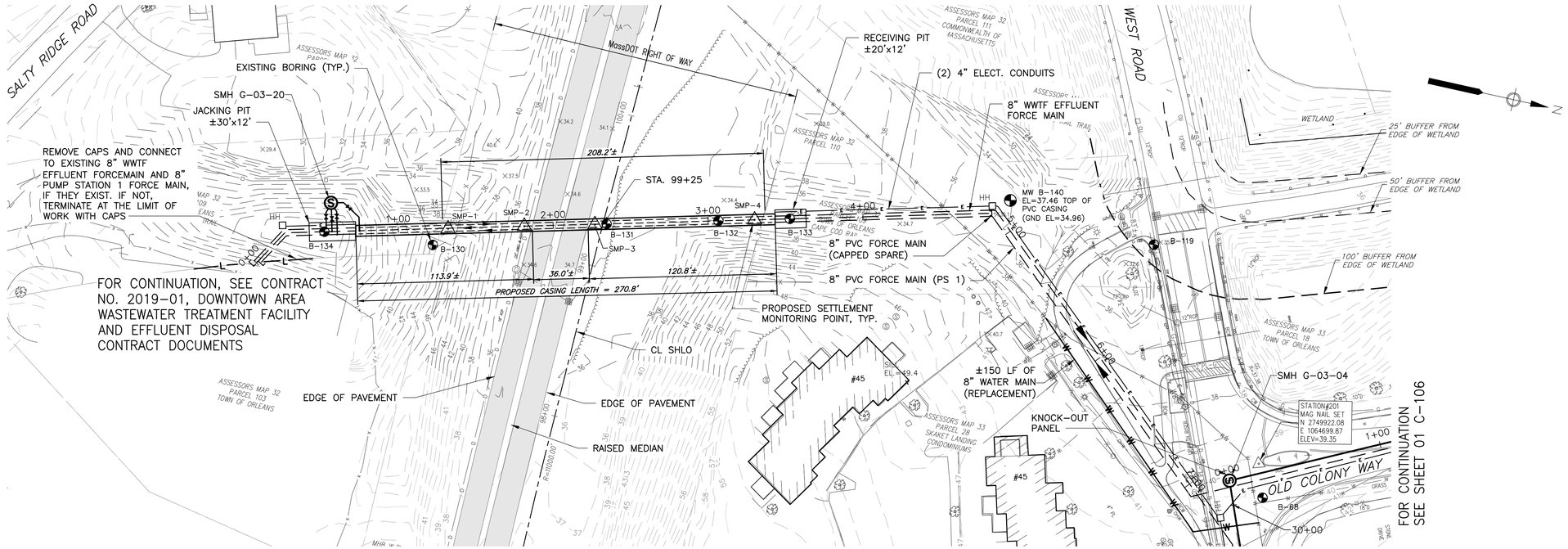

PLAN - ROUTE 6 CROSSING

SCALE: 1"=40'

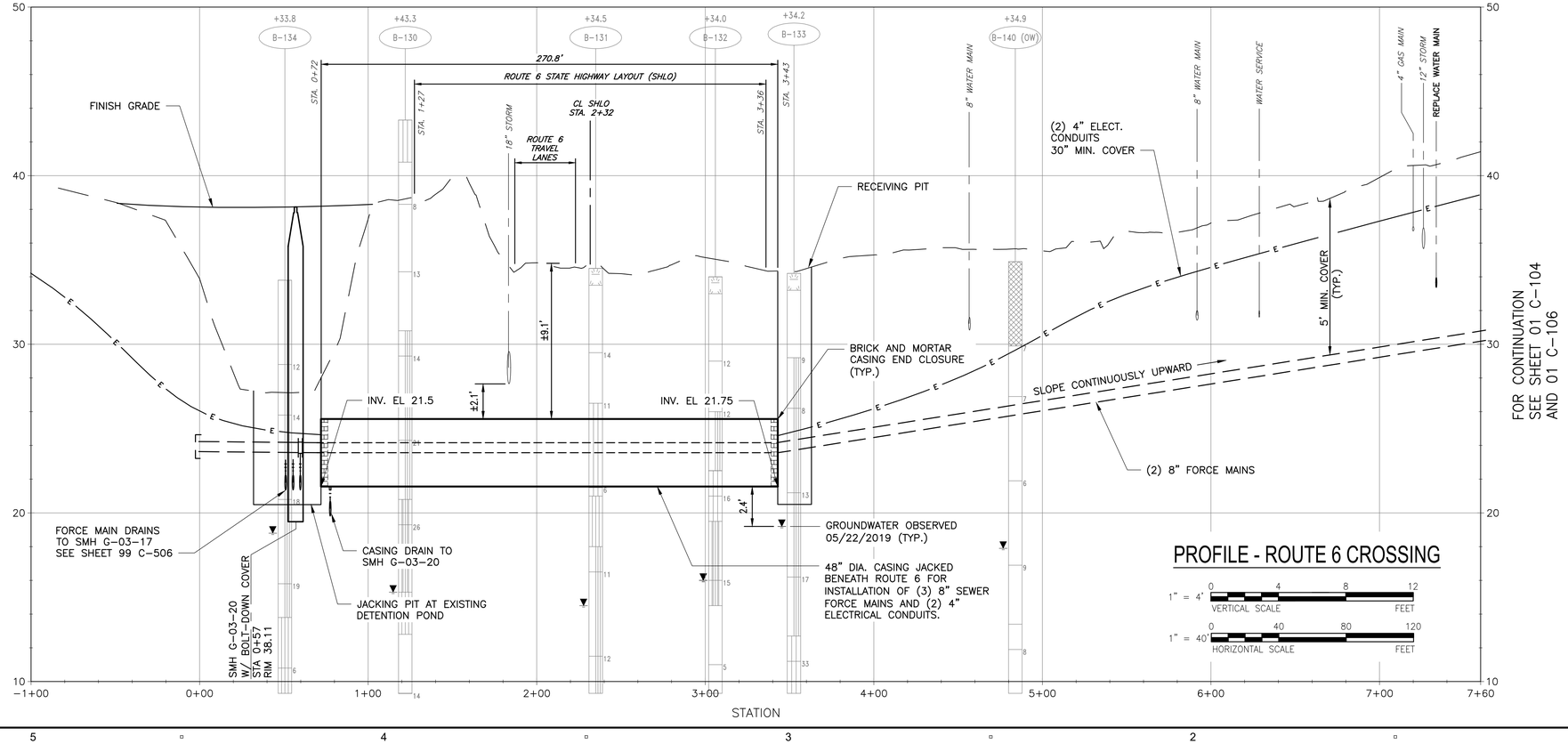

PROFILE - ROUTE 6 CROSSING

1" = 4' VERTICAL SCALE (0, 4, 8, 12 FEET)

1" = 40' HORIZONTAL SCALE (0, 40, 80, 120 FEET)

AECOM

PROJECT

DOWNTOWN AREA COLLECTION SYSTEM AND PUMP STATIONS

CONTRACT No. 2019-02
SRF No. 4486

OWNER

TOWN OF ORLEANS, MA
19 SCHOOL ROAD
ORLEANS, MA 02653
(508) 240-3700

ENGINEER

AECOM TECHNICAL SERVICES, INC.
9 JONATHAN BOURNE DRIVE
POCASSET, MA 02559
PHONE: (508) 833-6950
www.aecom.com

REGISTRATION

COMMONWEALTH OF MASSACHUSETTS
THOMAS E. PARECE
CIVIL
No. 34463
REGISTERED PROFESSIONAL ENGINEER

ISSUE/REVISION

I/R	DATE	DESCRIPTION

PROJECT NUMBER

60587515

Designed By:	M. CURRAN
Drawn By:	M. CURRAN
Dept Check:	T. PARECE
Proj Check:	M. DONOGHUE
Date:	JANUARY 2020
Scale:	AS NOTED

DISCIPLINE

CIVIL

SHEET TITLE

PLAN AND PROFILE SEWER ROUTE 6 CROSSING

SHEET NUMBER

01 C-105

Last saved by: CURRANM (2020-02-03) Last Plotted: 2020-02-04
Filename: L:\WORK\60478644 - ORLEANS DOWNTOWN SEWER\C3D - DOWNTOWN_SOURCE DRAWINGS\PS-1 - DOWNTOWN.DWG

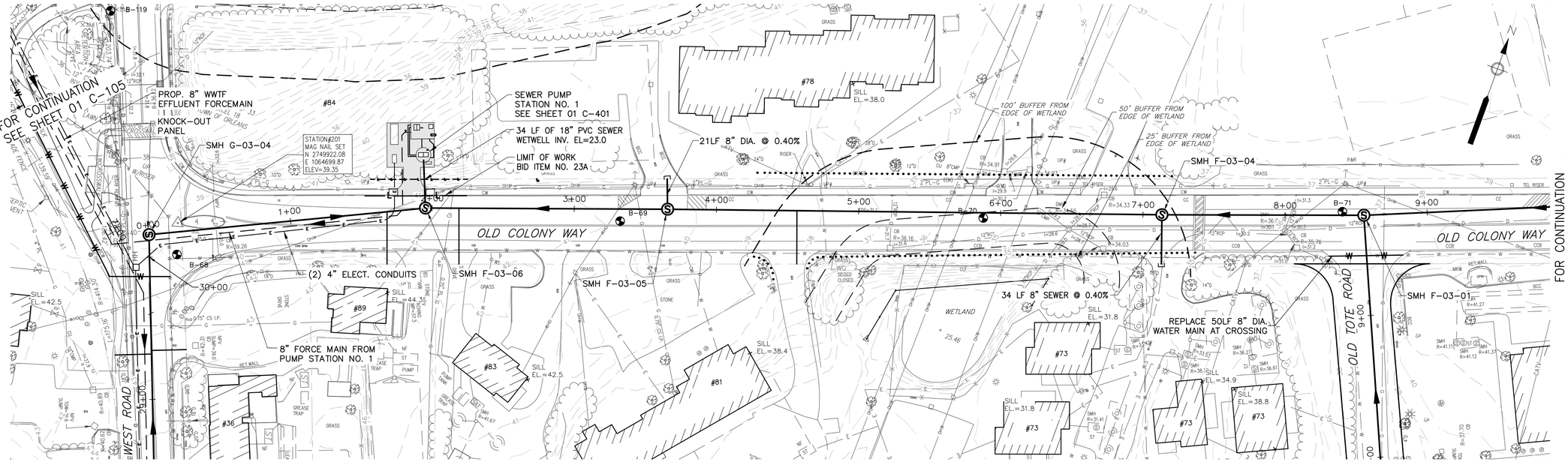

PLAN - OLD COLONY WAY

SCALE: 1"=40'

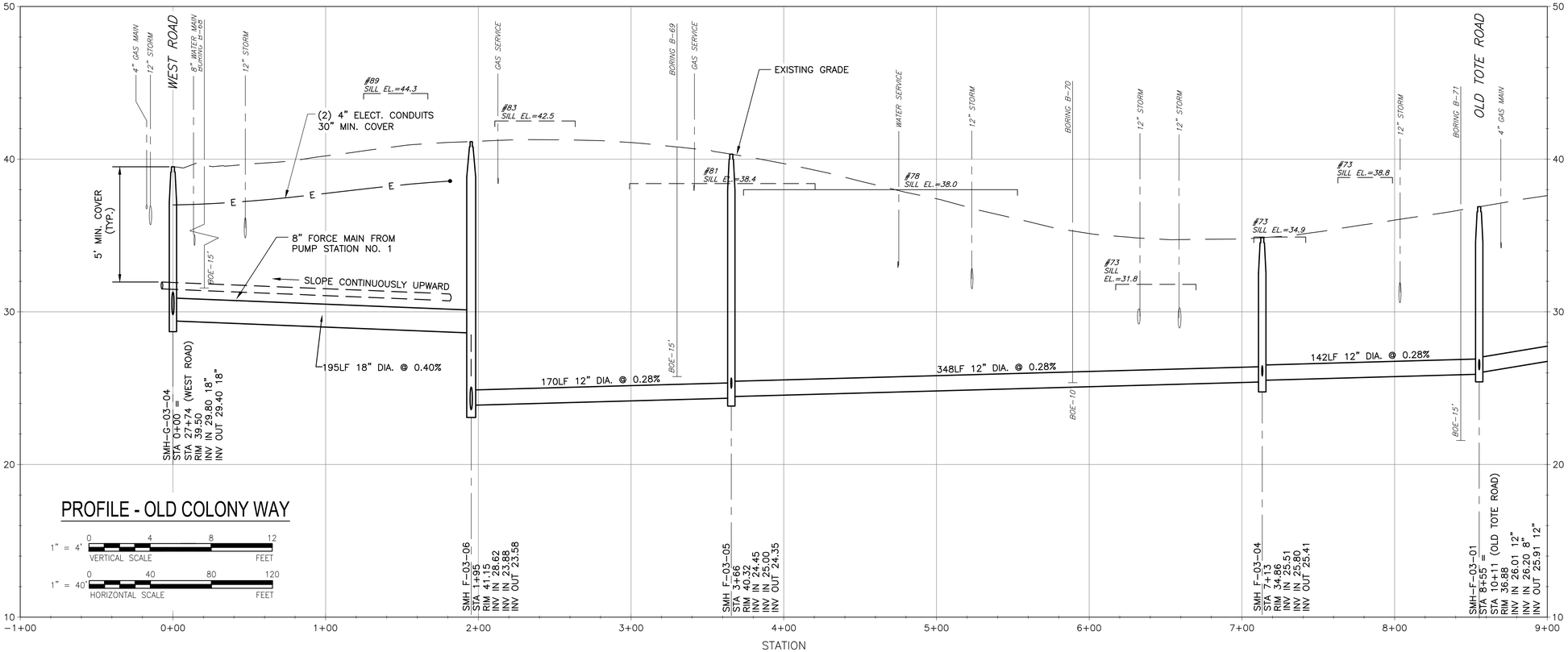

PROFILE - OLD COLONY WAY

1" = 4' VERTICAL SCALE: 0, 4, 8, 12 FEET

1" = 40' HORIZONTAL SCALE: 0, 40, 80, 120 FEET

AECOM

PROJECT

DOWNTOWN AREA
COLLECTION SYSTEM
AND PUMP STATIONS

CONTRACT No. 2019-02
SRF No. 4486

OWNER

TOWN OF ORLEANS, MA
19 SCHOOL ROAD
ORLEANS, MA 02653
(508) 240-3700

ENGINEER

AECOM TECHNICAL SERVICES, INC.
9 JONATHAN BOURNE DRIVE
POCASSET, MA 02559
PHONE: (508) 833-6950
www.aecom.com

REGISTRATION

COMMONWEALTH OF MASSACHUSETTS
THOMAS E. PARECE
CIVIL
No. 34463
REGISTERED PROFESSIONAL ENGINEER

ISSUE/REVISION

I/R	DATE	DESCRIPTION

PROJECT NUMBER

60587515

Designed By:	M. CURRAN
Drawn By:	M. CURRAN
Dept Check:	T. PARECE
Proj Check:	M. DONOGHUE
Date:	JANUARY 2020
Scale:	AS NOTED

DISCIPLINE

CIVIL

SHEET TITLE

PLAN AND PROFILE SEWER
OLD COLONY WAY I

SHEET NUMBER

01 C-106

Last saved by: CURRANM (2020-02-03) Last Plotted: 2020-02-04
Filename: L:\WORK\60478644 - ORLEANS DOWNTOWN SEWER\C3D - DOWNTOWN_SOURCE DRAWINGS\PS-1 - DOWNTOWN.DWG

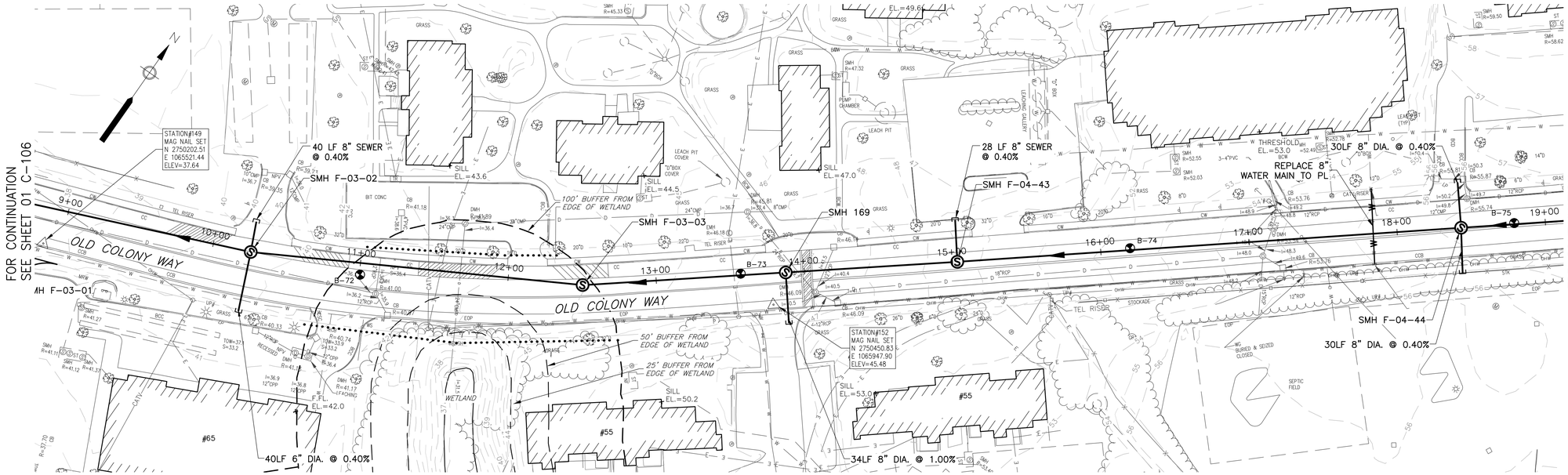

PLAN - OLD COLONY WAY

SCALE: 1"=40'

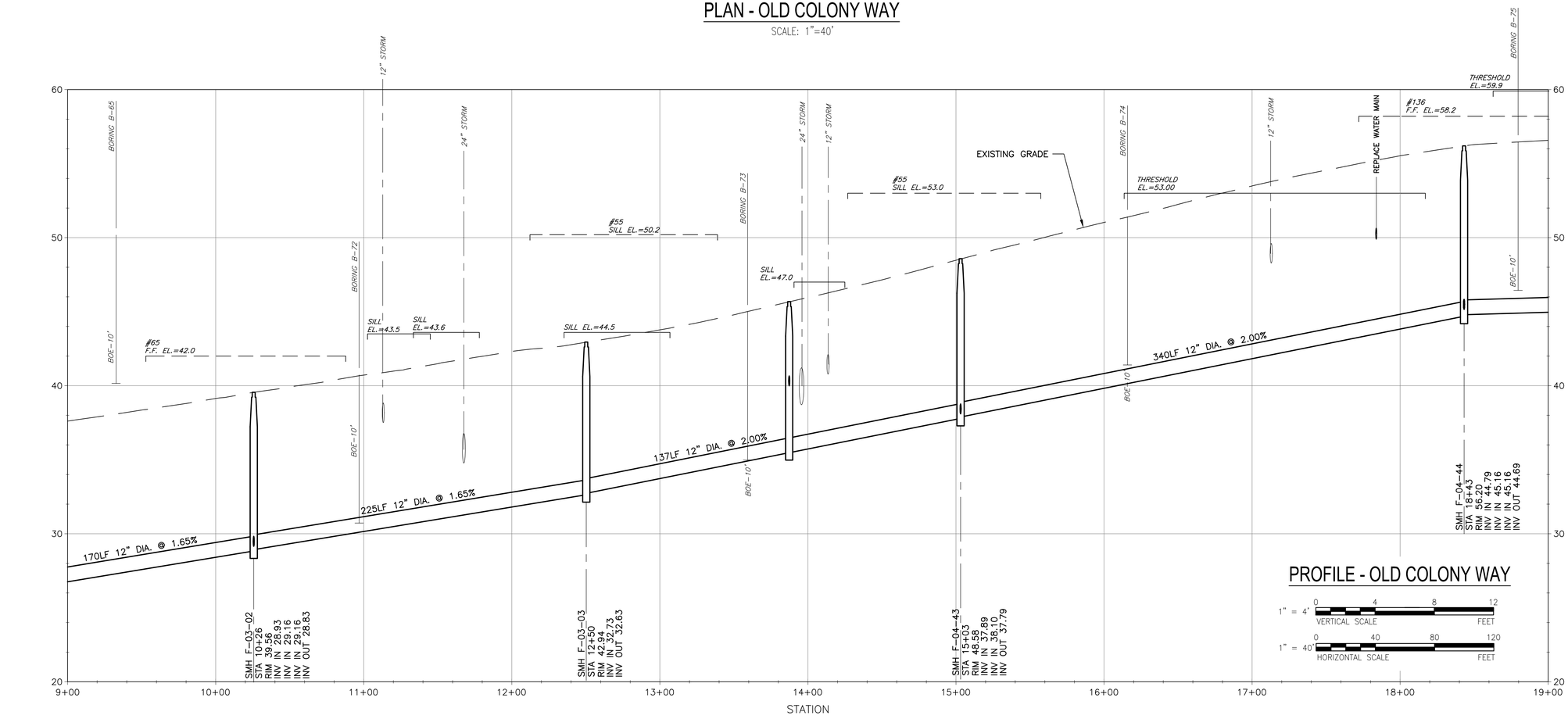

PROFILE - OLD COLONY WAY

1" = 4' VERTICAL SCALE (0, 4, 8, 12 FEET)

1" = 40' HORIZONTAL SCALE (0, 40, 80, 120 FEET)

AECOM

PROJECT

DOWNTOWN AREA COLLECTION SYSTEM AND PUMP STATIONS

CONTRACT No. 2019-02
SRF No. 4486

OWNER

TOWN OF ORLEANS, MA
19 SCHOOL ROAD
ORLEANS, MA 02653
(508) 240-3700

ENGINEER

AECOM TECHNICAL SERVICES, INC.
9 JONATHAN BOURNE DRIVE
POCASSET, MA 02559
PHONE: (508) 833-6950
www.aecom.com

REGISTRATION

COMMONWEALTH OF MASSACHUSETTS
THOMAS E. PARECE
CIVIL
No. 34463
REGISTERED PROFESSIONAL ENGINEER

ISSUE/REVISION

I/R	DATE	DESCRIPTION

PROJECT NUMBER

60587515

Designed By:	M. CURRAN
Drawn By:	M. CURRAN
Dept Check:	T. PARECE
Proj Check:	M. DONOGHUE
Date:	JANUARY 2020
Scale:	AS NOTED

DISCIPLINE

CIVIL

SHEET TITLE

PLAN AND PROFILE SEWER OLD COLONY WAY II

SHEET NUMBER

01 C-107

Last saved by: CURRANM(2020-02-03) Last Plotted: 2020-02-04
Filename: L:\WORK\60476644 - ORLEANS DOWNTOWN SEWER\C3D - DOWNTOWN_SOURCE DRAWINGS\PS-1 - DOWNTOWN.DWG

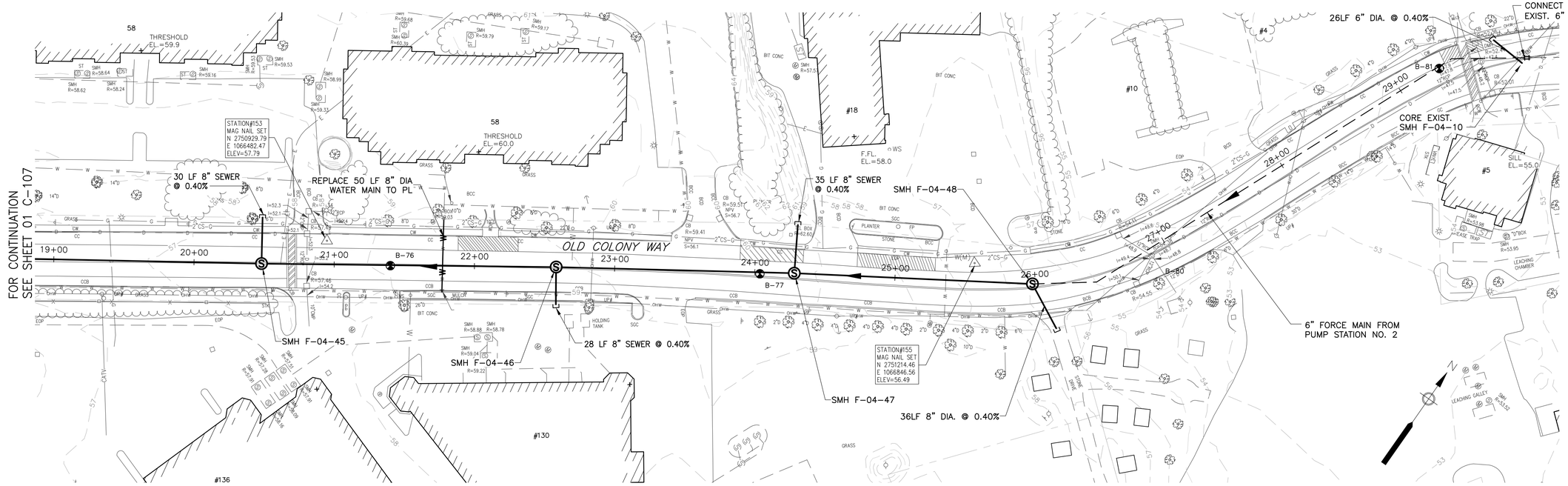

PLAN - OLD COLONY WAY

SCALE: 1"=40'

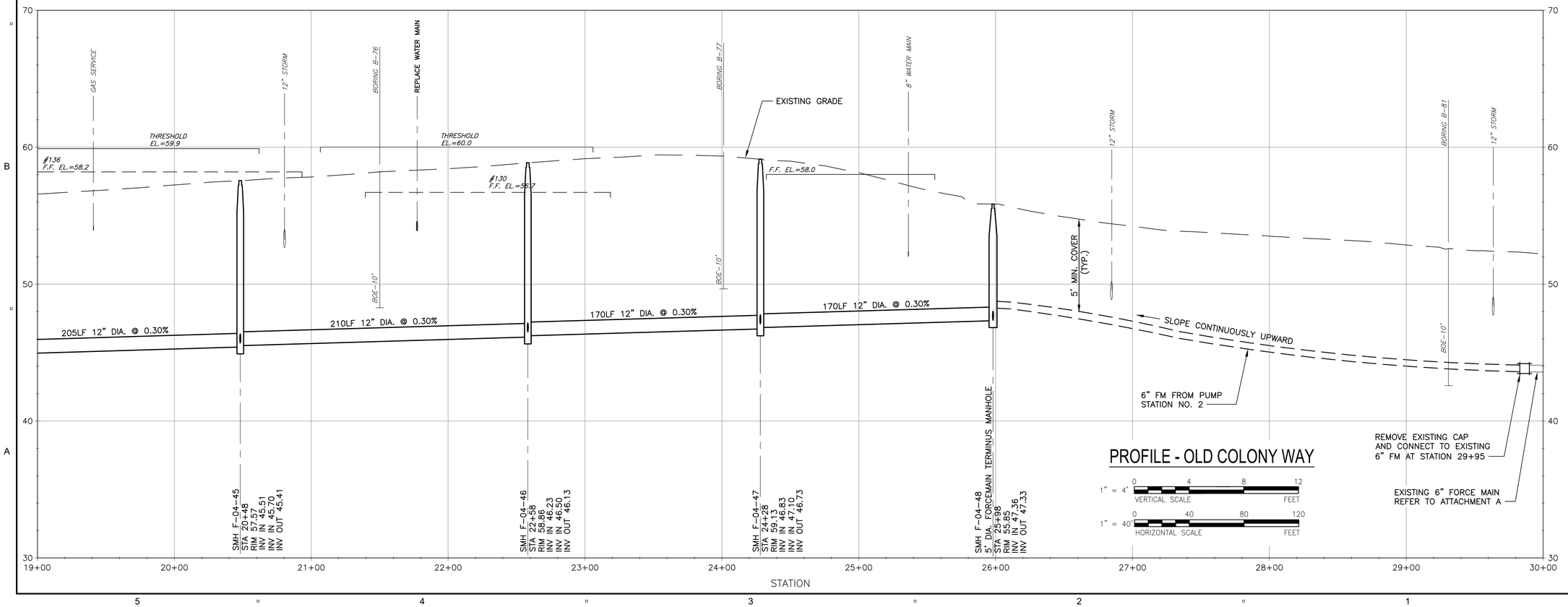

PROFILE - OLD COLONY WAY

1" = 4' VERTICAL SCALE 0 4 8 12 FEET

1" = 40' HORIZONTAL SCALE 0 40 80 120 FEET

Last saved by: CURRANM(2020-02-03) Last Plotted: 2020-02-04
Filename: L:\WORK\60\47\6644 - ORLEANS DOWNTOWN SEWER\C3D - DOWNTOWN_SOURCE DRAWINGS\PS-1 - DOWNTOWN.DWG

AECOM

PROJECT

DOWNTOWN AREA COLLECTION SYSTEM AND PUMP STATIONS

CONTRACT No. 2019-02
SRF No. 4486

OWNER

TOWN OF ORLEANS, MA
19 SCHOOL ROAD
ORLEANS, MA 02653
(508) 240-3700

ENGINEER

AECOM TECHNICAL SERVICES, INC.
9 JONATHAN BOURNE DRIVE
POCASSET, MA 02559
PHONE: (508) 833-6950
www.aecom.com

REGISTRATION

COMMONWEALTH OF MASSACHUSETTS
THOMAS E. PARECE
CIVIL
No. 34493
REGISTERED PROFESSIONAL ENGINEER
1/29/2020

ISSUE/REVISION

I/R	DATE	DESCRIPTION

PROJECT NUMBER

60587515

Designed By:	M. CURRAN
Drawn By:	M. CURRAN
Dept Check:	T. PARECE
Proj Check:	M. DONOGHUE
Date:	JANUARY 2020
Scale:	AS NOTED

DISCIPLINE

CIVIL

SHEET TITLE

PLAN AND PROFILE SEWER OLD COLONY WAY III

SHEET NUMBER

01 C-108

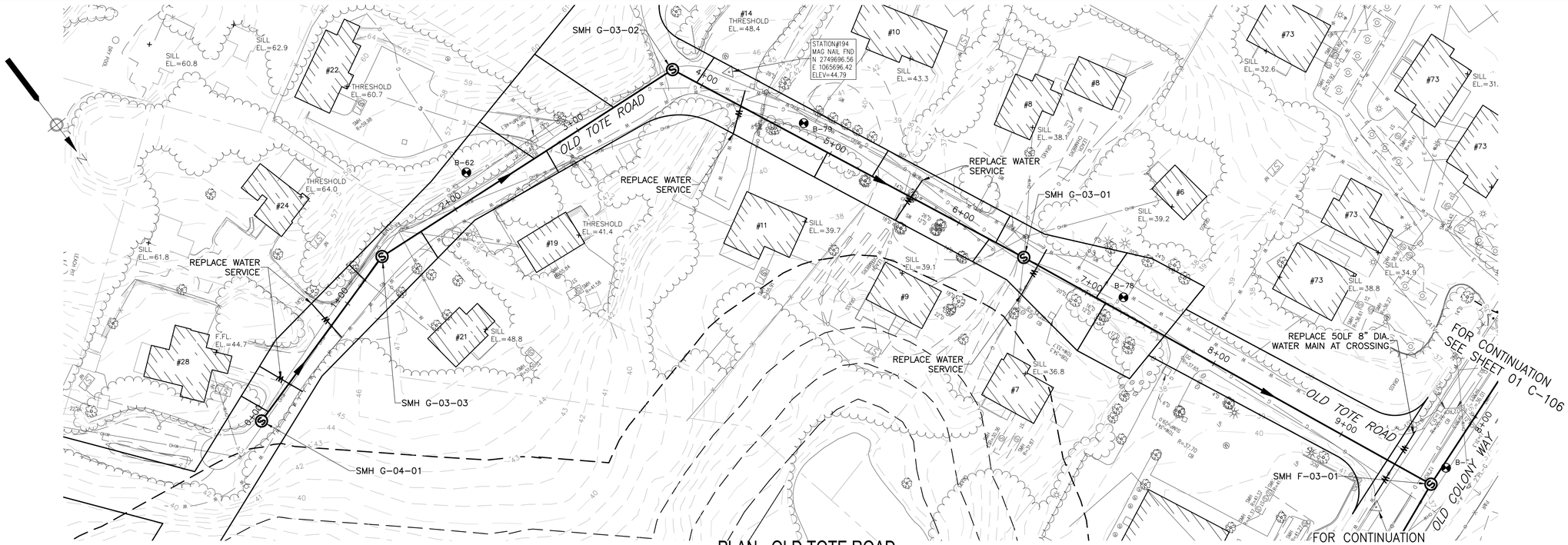

PLAN - OLD TOTE ROAD

SCALE: 1"=40'

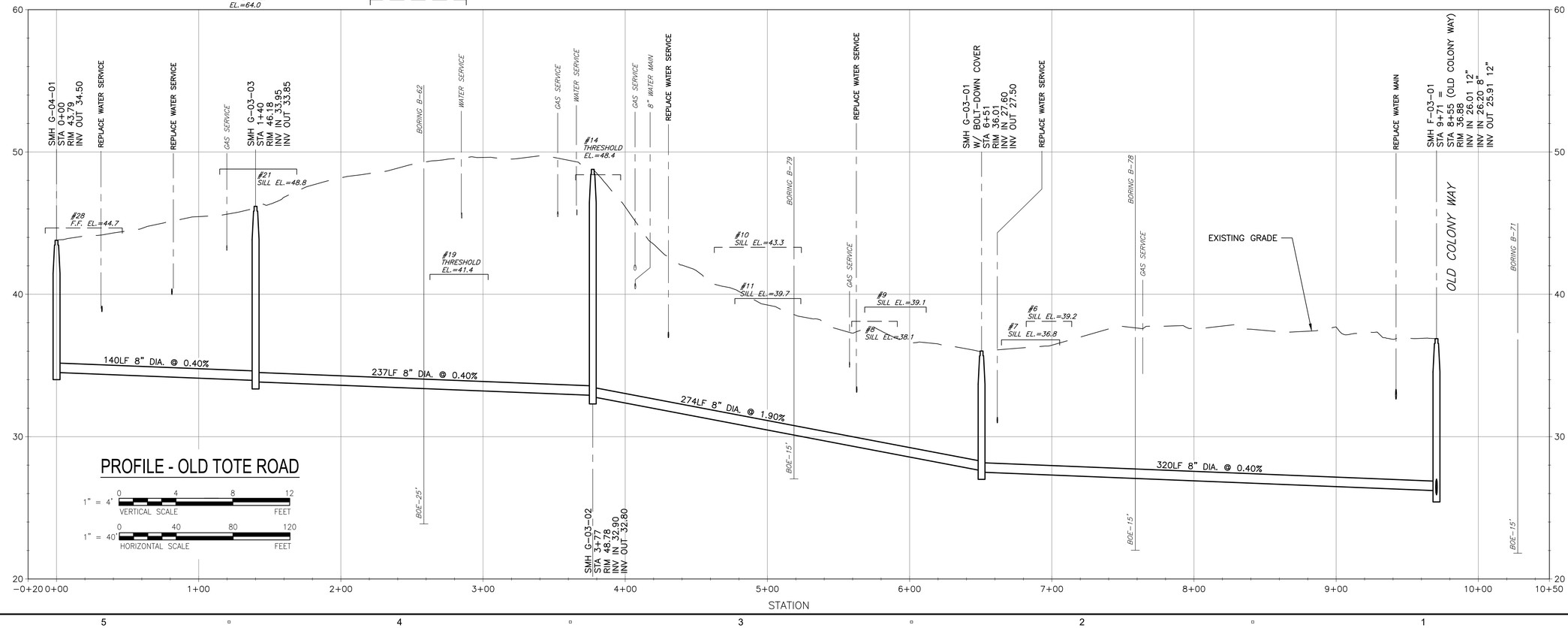

PROFILE - OLD TOTE ROAD

1" = 4' VERTICAL SCALE (0, 4, 8, 12 FEET)

1" = 40' HORIZONTAL SCALE (0, 40, 80, 120 FEET)

AECOM

PROJECT

DOWNTOWN AREA COLLECTION SYSTEM AND PUMP STATIONS

CONTRACT No. 2019-02
SRF No. 4486

OWNER

TOWN OF ORLEANS, MA
19 SCHOOL ROAD
ORLEANS, MA 02653
(508) 240-3700

ENGINEER

AECOM TECHNICAL SERVICES, INC.
9 JONATHAN BOURNE DRIVE
POCASSET, MA 02559
PHONE: (508) 833-6950
www.aecom.com

REGISTRATION

COMMONWEALTH OF MASSACHUSETTS
THOMAS E. PARECE
CIVIL
No. 34463
REGISTERED PROFESSIONAL ENGINEER

ISSUE/REVISION

I/R	DATE	DESCRIPTION

PROJECT NUMBER

60587515

Designed By:	M. CURRAN
Drawn By:	M. CURRAN
Dept Check:	T. PARECE
Proj Check:	M. DONOGHUE
Date:	JANUARY 2020
Scale:	AS NOTED

DISCIPLINE

CIVIL

SHEET TITLE

PLAN AND PROFILE SEWER OLD TOTE ROAD

SHEET NUMBER

01 C-109

Last saved by: CURRANM(2020-02-03) Last Plotted: 2020-02-04
Filename: L:\WORK\60476644 - ORLEANS DOWNTOWN SEWER\C3D - DOWNTOWN_SOURCE DRAWINGS\PS-1 - DOWNTOWN.DWG

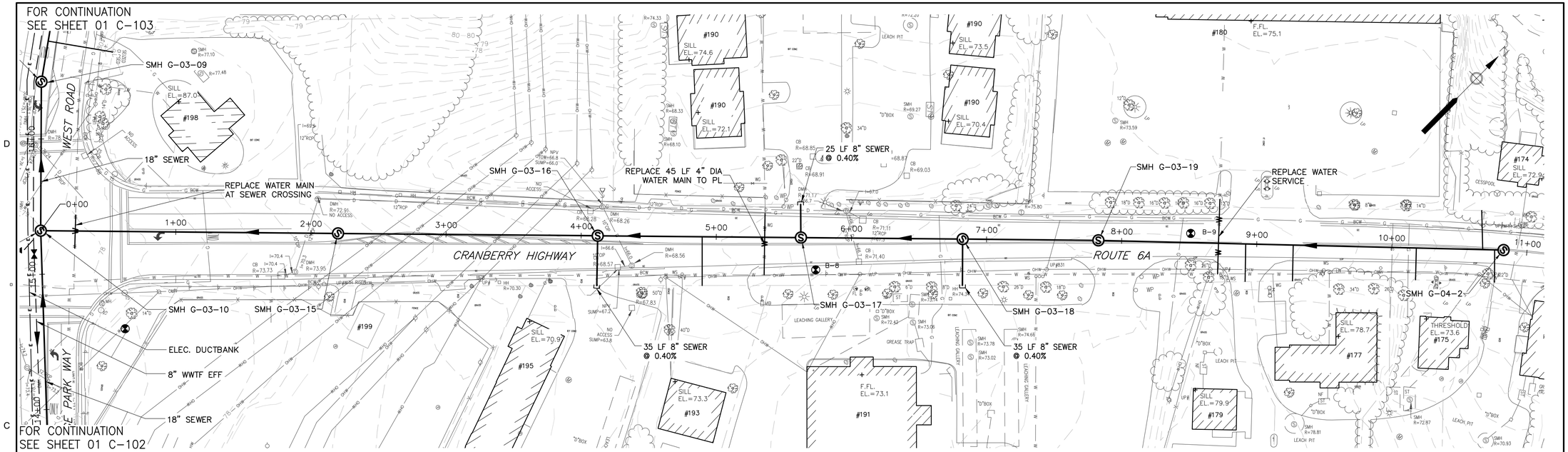

PLAN - CRANBERRY HIGHWAY (ROUTE 6A)

SCALE: 1"=40'

NOTES:
1. CONTRACTOR SHALL ADJUST DRAINAGE AND OTHER UTILITY STRUCTURES WITHIN THE MILLED/PAVED AREAS AS REQUIRED.
2. CONTRACTOR IS RESPONSIBLE FOR ANY AND ALL REPAIRS TO THE DRAINAGE SYSTEM IF IMPACTED BY THIS WORK.

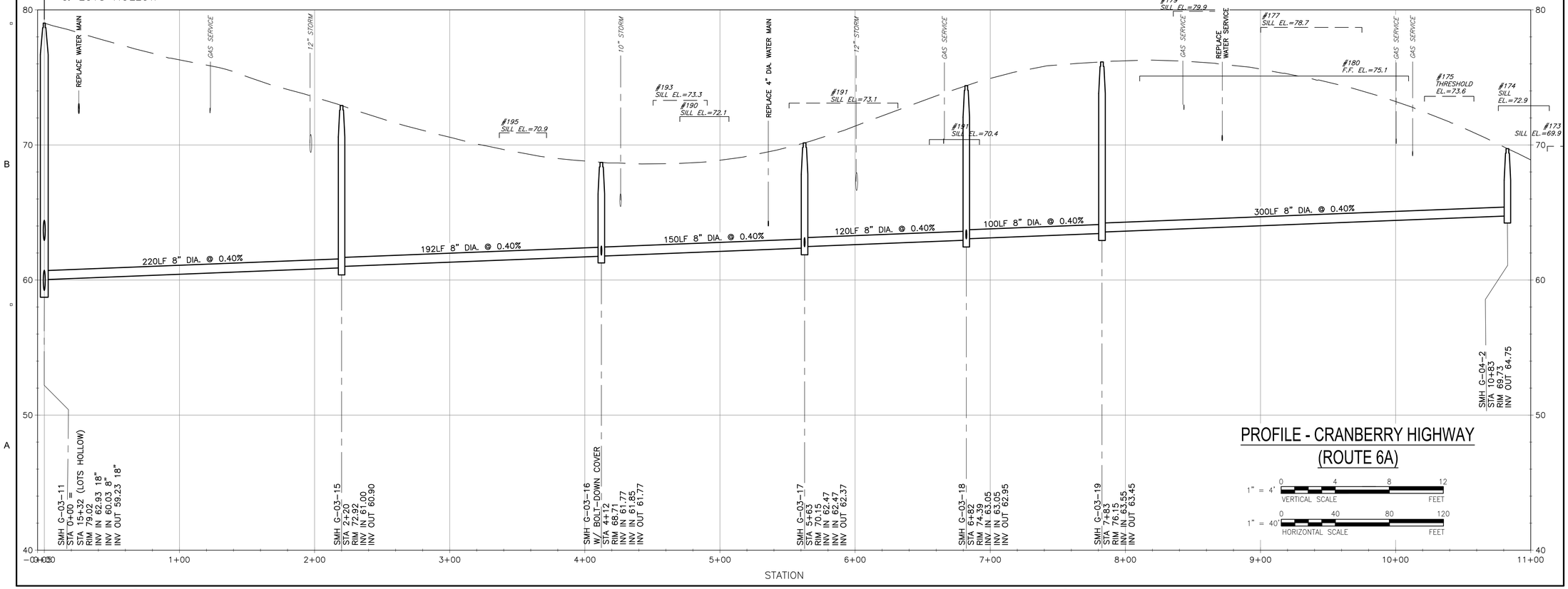

PROFILE - CRANBERRY HIGHWAY (ROUTE 6A)

1" = 4' VERTICAL SCALE (0, 4, 8, 12 FEET)

1" = 40' HORIZONTAL SCALE (0, 40, 80, 120 FEET)

AECOM

PROJECT

DOWNTOWN AREA COLLECTION SYSTEM AND PUMP STATIONS

CONTRACT No. 2019-02
SRF No. 4486

OWNER

TOWN OF ORLEANS, MA
19 SCHOOL ROAD
ORLEANS, MA 02653
(508) 240-3700

ENGINEER

AECOM TECHNICAL SERVICES, INC.
9 JONATHAN BOURNE DRIVE
POCASSET, MA 02559
PHONE: (508) 833-6950
www.aecom.com

REGISTRATION

COMMONWEALTH OF MASSACHUSETTS
THOMAS E. PARECE
CIVIL
No. 34463
REGISTERED PROFESSIONAL ENGINEER

ISSUE/REVISION

I/R	DATE	DESCRIPTION

PROJECT NUMBER

60587515

Designed By:	M. DONOGHUE
Drawn By:	M. CURRAN
Dept Check:	T. PARECE
Proj Check:	M. DONOGHUE
Date:	JANUARY 2020
Scale:	AS NOTED

DISCIPLINE

CIVIL

SHEET TITLE

PLAN AND PROFILE SEWER CRANBERRY HIGHWAY

SHEET NUMBER

01 C-110

Last saved by: CURRANM (2020-02-03) Last Plotted: 2020-02-24
Filename: L:\WORK\60476644 - ORLEANS DOWNTOWN SEWER\C3D - DOWNTOWN_SOURCE DRAWINGS\PS-1 - DOWNTOWN.DWG

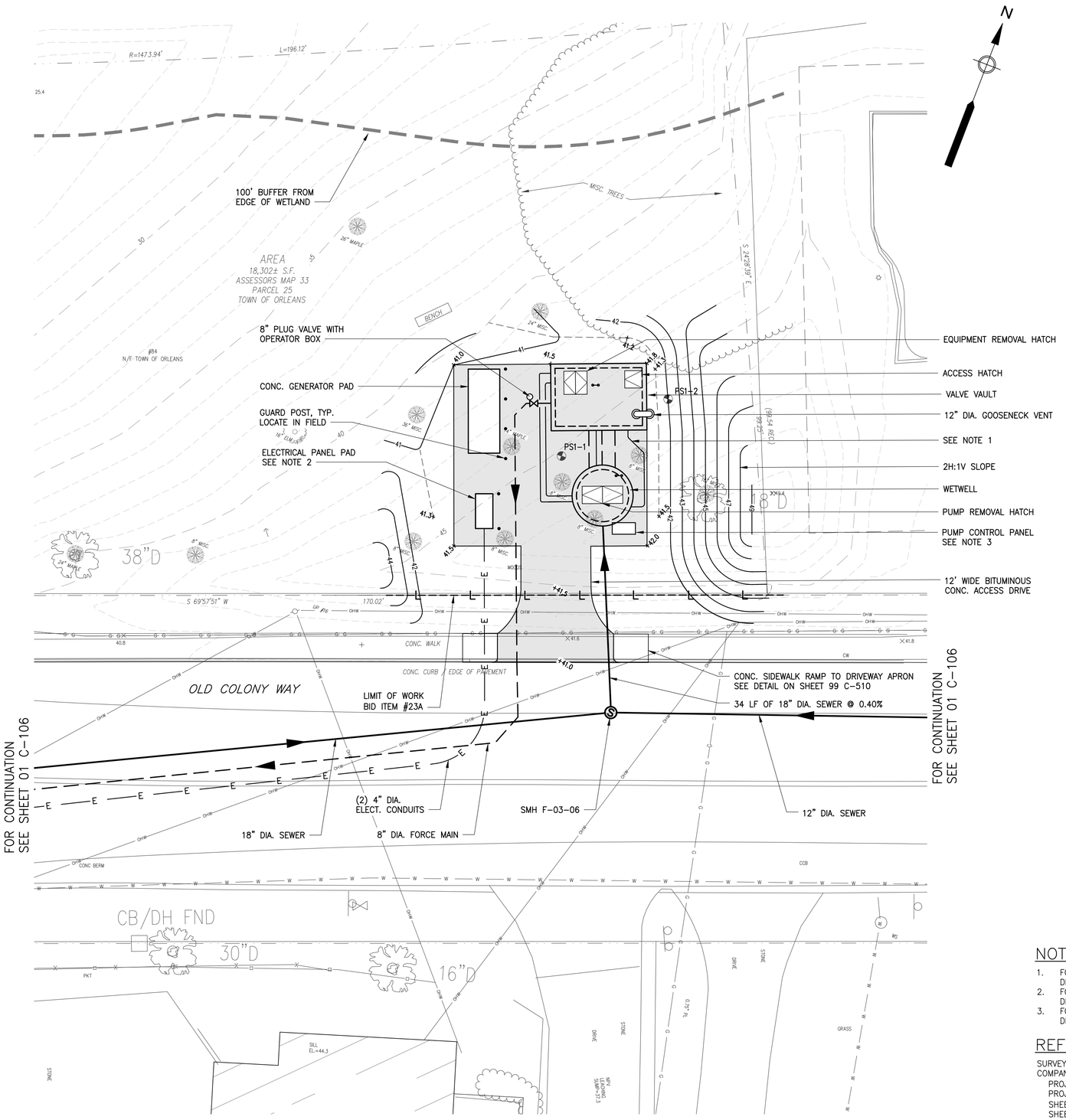

SITE PLAN
SCALE: 1" = 10'-0"

NOTES:

1. FOR PUMP STATION PIPING, REFER TO MECHANICAL PROCESS DRAWINGS.
2. FOR PUMP STATION POWER AND GROUNDING, SEE ELECTRICAL DRAWINGS.
3. FOR PUMP STATION CONTROLS, REFER TO INSTRUMENTATION DRAWINGS.

REFERENCE

SURVEY FOR THIS SITE PROVIDED BY COASTAL ENGINEERING COMPANY, INC, 260 CRANBERRY HIGHWAY, ORLEANS, MA 02653.

PROJECT	"AECOM – 84 OLD COLONY WAY"
PROJECT NO.	C18686.01
SHEET TITLE	"PLAN SHOWING EXISTING SITE CONDITIONS"
SHEET NO.	C1.2.1

1" = 10' SCALE: 0, 10, 20, 30 FEET

AECOM

PROJECT

DOWNTOWN AREA COLLECTION SYSTEM AND PUMP STATIONS

CONTRACT No. 2019-02
SRF No. 4486

OWNER

TOWN OF ORLEANS, MA
19 SCHOOL ROAD
ORLEANS, MA 02653
(508) 240-3700

ENGINEER

AECOM TECHNICAL SERVICES, INC.
9 JONATHAN BOURNE DRIVE
POCASSET, MA 02559
PHONE: (508) 833-6950
www.aecom.com

REGISTRATION

COMMONWEALTH OF MASSACHUSETTS
THOMAS E. PARECE
CIVIL
No. 34483
REGISTERED PROFESSIONAL ENGINEER
2020

ISSUE/REVISION

I/R	DATE	DESCRIPTION

PROJECT NUMBER

60587515

Designed By:	M. CURRAN
Drawn By:	M. CURRAN
Dept Check:	T. PARECE
Proj Check:	M. DONOGHUE
Date:	JANUARY 2020
Scale:	AS NOTED

DISCIPLINE

CIVIL

SHEET TITLE

PUMP STATION NO. 1 SITE PLAN

SHEET NUMBER

01 C-401

Last saved by: CURRANM(2020-02-04) Last Plotted: 2020-02-04
Filename: P:\60476844 - ORLEANS DOWNTOWN PUMP STATIONS\SHEETS\C\01 C-401.DWG



PLAN - CRANBERRY HIGHWAY

SCALE: 1"=40'

NOTES:

1. CONTRACTOR SHALL ADJUST DRAINAGE AND OTHER UTILITY STRUCTURES WITHIN THE MILLED/PAVED AREAS AS REQUIRED.
2. CONTRACTOR IS RESPONSIBLE FOR ANY AND ALL REPAIRS TO THE DRAINAGE SYSTEM IF IMPACTED BY THIS WORK.

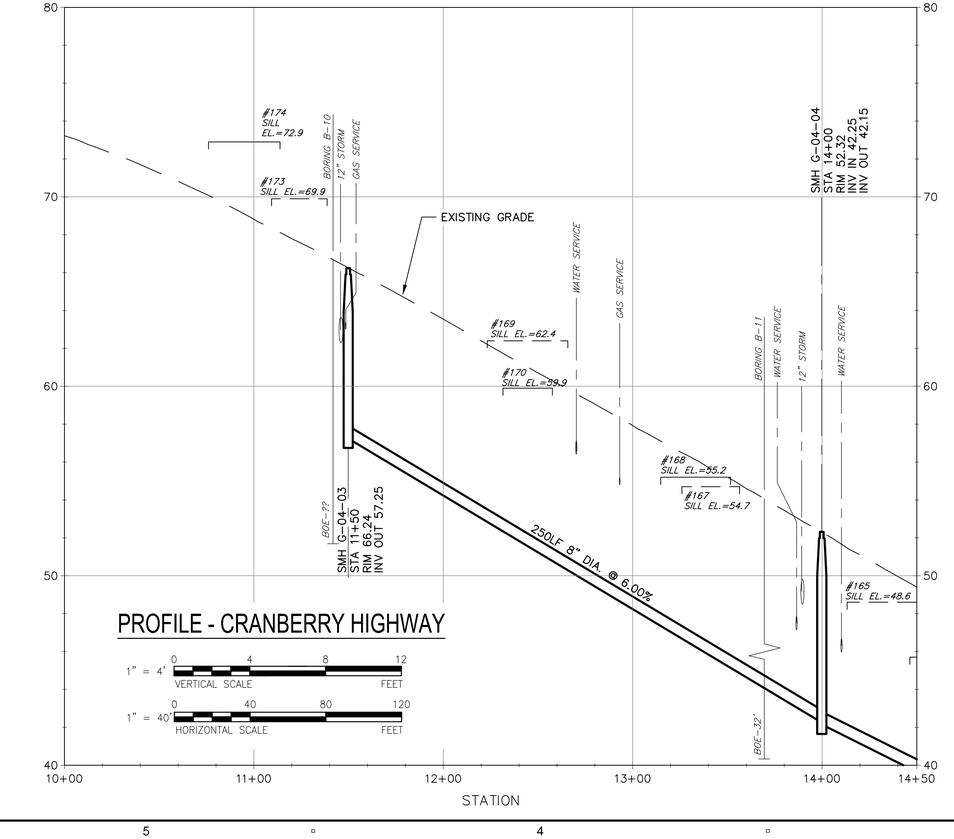

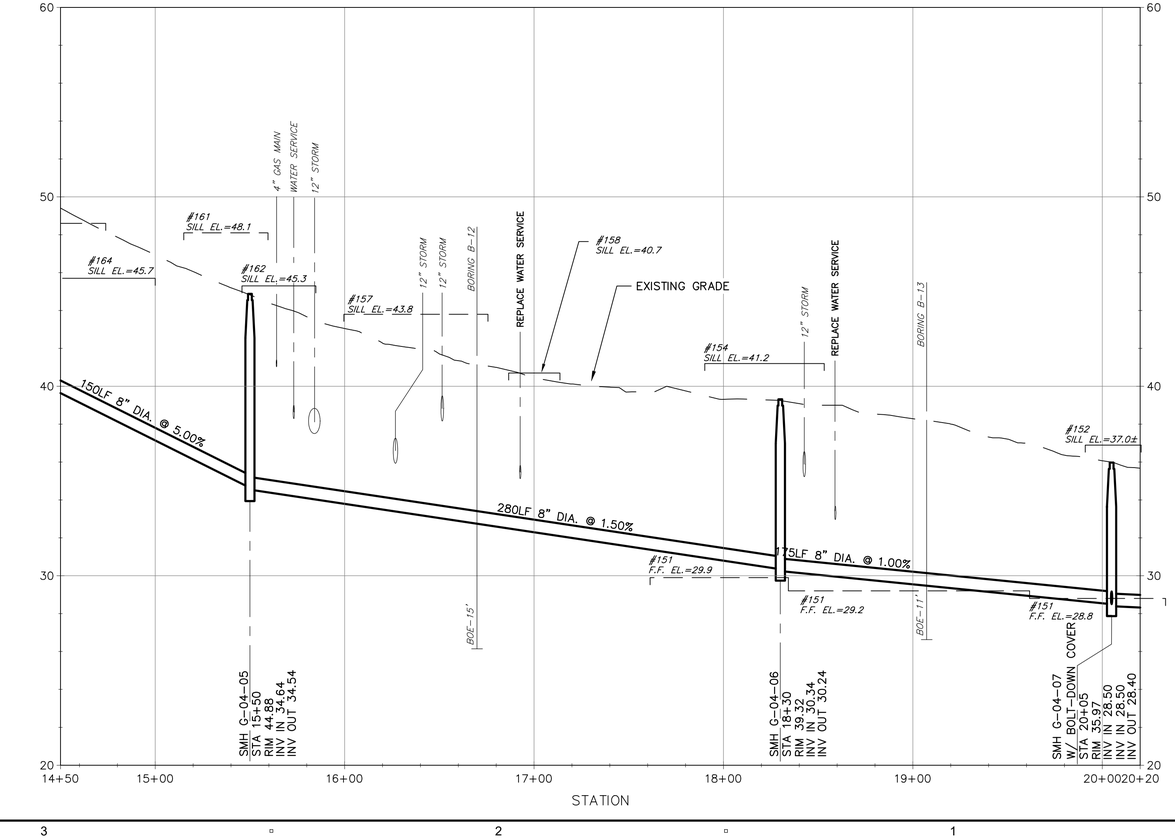

AECOM

PROJECT

DOWNTOWN AREA COLLECTION SYSTEM AND PUMP STATIONS

CONTRACT No. 2019-02
SRF No. 4486

OWNER

TOWN OF ORLEANS, MA
19 SCHOOL ROAD
ORLEANS, MA 02653
(508) 240-3700

ENGINEER

AECOM TECHNICAL SERVICES, INC.
9 JONATHAN BOURNE DRIVE
POCASSET, MA 02559
PHONE: (508) 833-6950
www.aecom.com

REGISTRATION

COMMONWEALTH OF MASSACHUSETTS
THOMAS E. PARECE
CIVIL
No. 34493
REGISTERED PROFESSIONAL ENGINEER
9/30/2020

ISSUE/REVISION

I/R	DATE	DESCRIPTION

PROJECT NUMBER

60587515

Designed By:	M. CURRAN
Drawn By:	M. CURRAN
Dept Check:	T. PARECE
Proj Check:	M. DONOGHUE
Date:	JANUARY 2020
Scale:	AS NOTED

DISCIPLINE

CIVIL

SHEET TITLE

PLAN AND PROFILE SEWER CRANBERRY HIGHWAY I

SHEET NUMBER

02 C-101

Last saved by: CURRANM(2020-02-04) Last Plotted: 2020-02-04
Filename: L:\WORK\60587\644 - ORLEANS DOWNTOWN SEWER\C3D - DOWNTOWN_SOURCE DRAWINGS\PS-2 - DOWNTOWN.DWG

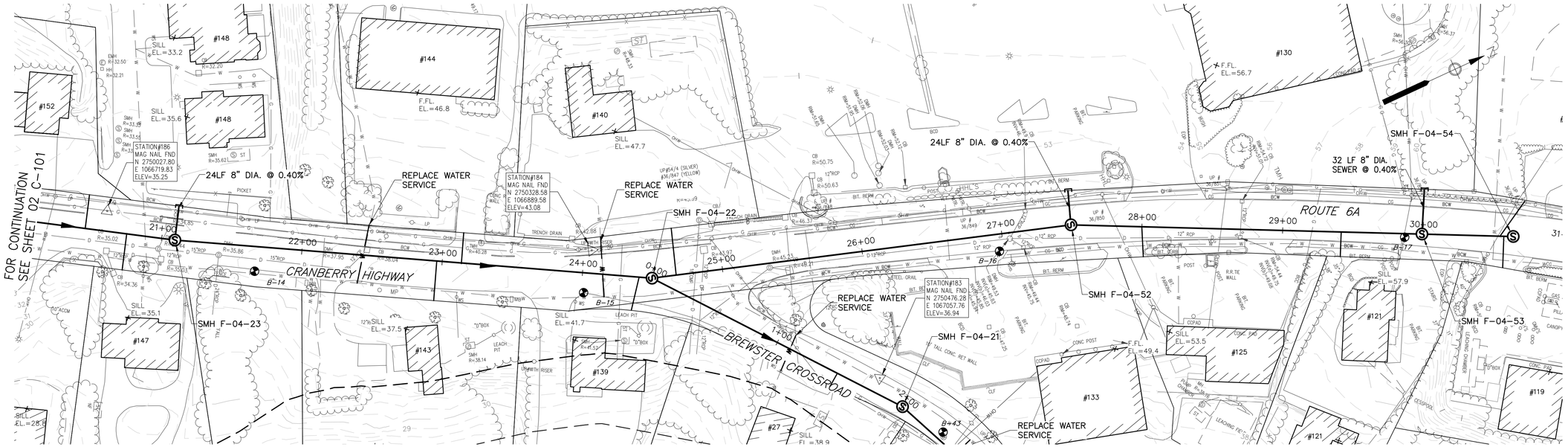

PLAN - CRANBERRY HIGHWAY

SCALE: 1"=40'

FOR CONTINUATION
SEE SHEET 02 C-104

NOTES:
1. CONTRACTOR SHALL ADJUST DRAINAGE AND OTHER UTILITY STRUCTURES WITHIN THE MILLED/PAVED AREAS AS REQUIRED.
2. CONTRACTOR IS RESPONSIBLE FOR ANY AND ALL REPAIRS TO THE DRAINAGE SYSTEM IF IMPACTED BY THIS WORK.

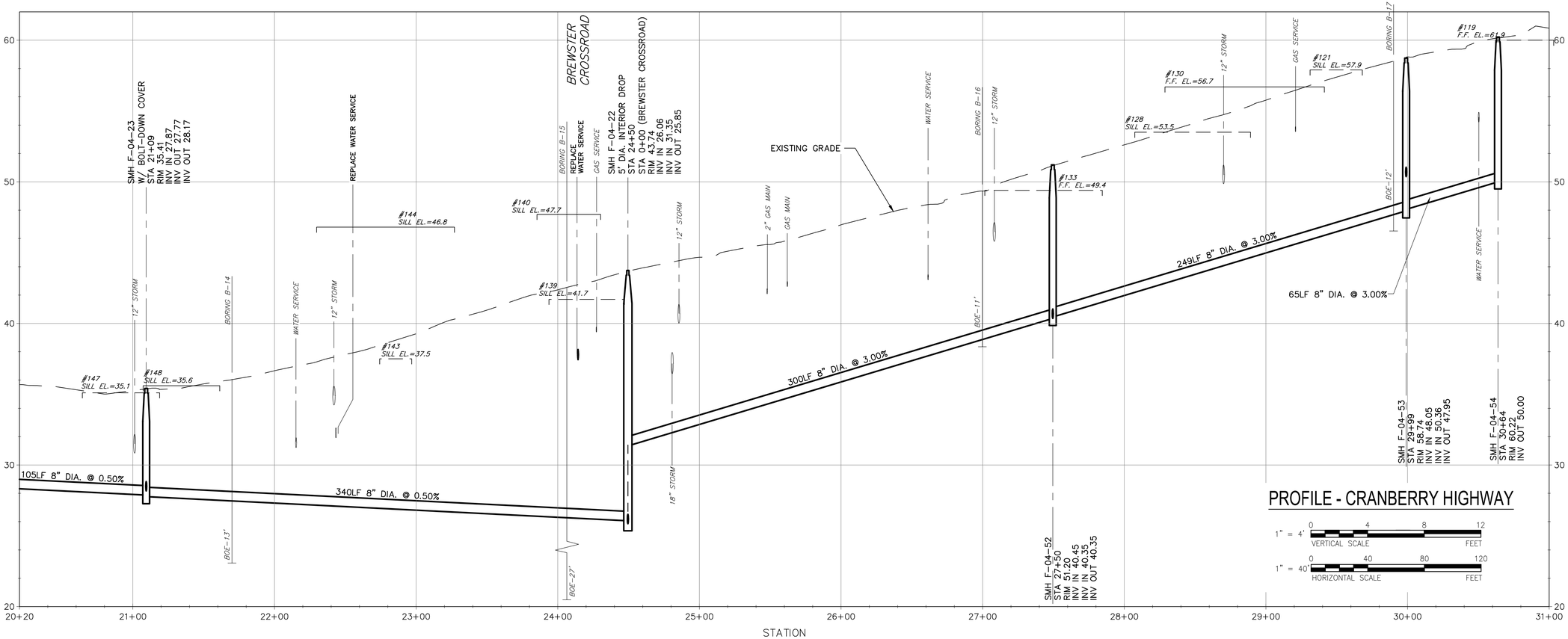

PROFILE - CRANBERRY HIGHWAY

1" = 4' VERTICAL SCALE (0, 4, 8, 12 FEET)

1" = 40' HORIZONTAL SCALE (0, 40, 80, 120 FEET)

AECOM

PROJECT

DOWNTOWN AREA COLLECTION SYSTEM AND PUMP STATIONS

CONTRACT No. 2019-02
SRF No. 4486

OWNER

TOWN OF ORLEANS, MA
19 SCHOOL ROAD
ORLEANS, MA 02653
(508) 240-3700

ENGINEER

AECOM TECHNICAL SERVICES, INC.
9 JONATHAN BOURNE DRIVE
POCASSET, MA 02559
PHONE: (508) 833-6950
www.aecom.com

REGISTRATION

COMMONWEALTH OF MASSACHUSETTS
THOMAS E. PARECE
CIVIL
No. 34463
REGISTERED PROFESSIONAL ENGINEER

ISSUE/REVISION

I/R	DATE	DESCRIPTION

PROJECT NUMBER

60587515

Designed By:	M. CURRAN
Drawn By:	M. CURRAN
Dept Check:	T. PARECE
Proj Check:	M. DONOGHUE
Date:	JANUARY 2020
Scale:	AS NOTED

DISCIPLINE

CIVIL

SHEET TITLE

PLAN AND PROFILE SEWER CRANBERRY HIGHWAY II

SHEET NUMBER

02 C-102

Last saved by: CURRANM(2020-02-04) Last Plotted: 2020-02-04
Filename: L:\WORK\60\47\6644 - ORLEANS DOWNTOWN SEWER\C3D - DOWNTOWN_SOURCE DRAWINGS\PS-2 - DOWNTOWN.DWG

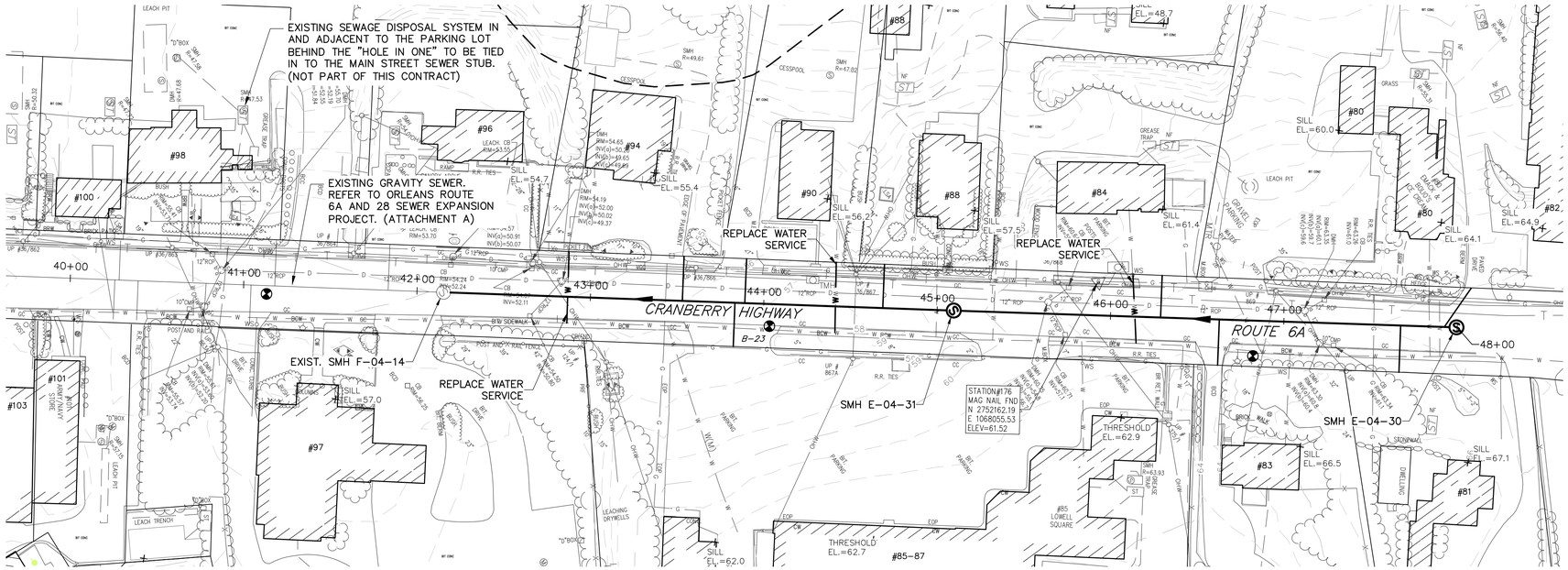

PLAN - CRANBERRY HIGHWAY

SCALE: 1"=40'

NOTES:
1. CONTRACTOR SHALL ADJUST DRAINAGE AND OTHER UTILITY STRUCTURES WITHIN THE MILLED/PAVED AREAS AS REQUIRED.
2. CONTRACTOR IS RESPONSIBLE FOR ANY AND ALL REPAIRS TO THE DRAINAGE SYSTEM IF IMPACTED BY THIS WORK.

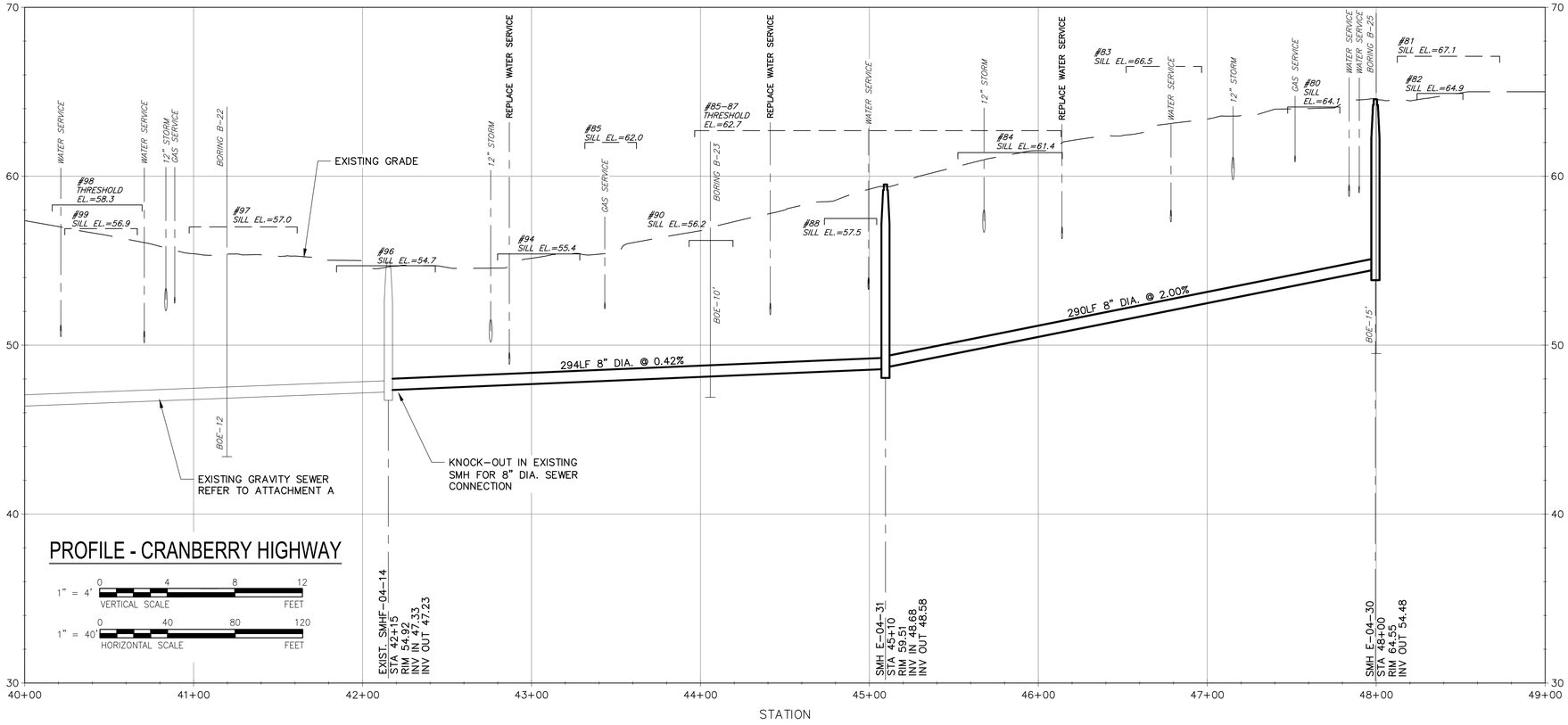

AECOM

PROJECT

DOWNTOWN AREA COLLECTION SYSTEM AND PUMP STATIONS

CONTRACT No. 2019-02
SRF No. 4486

OWNER

TOWN OF ORLEANS, MA
19 SCHOOL ROAD
ORLEANS, MA 02653
(508) 240-3700

ENGINEER

AECOM TECHNICAL SERVICES, INC.
9 JONATHAN BOURNE DRIVE
POCASSET, MA 02559
PHONE: (508) 833-6950
www.aecom.com

REGISTRATION

COMMONWEALTH OF MASSACHUSETTS
THOMAS E. PARECE
CIVIL
No. 34483
REGISTERED PROFESSIONAL ENGINEER
10/19/2020

ISSUE/REVISION

I/R	DATE	DESCRIPTION

PROJECT NUMBER

60587515

Designed By:	M. CURRAN
Drawn By:	M. CURRAN
Dept Check:	T. PARECE
Proj Check:	M. DONOGHUE
Date:	JANUARY 2020
Scale:	AS NOTED

DISCIPLINE

CIVIL

SHEET TITLE

PLAN AND PROFILE SEWER CRANBERRY HIGHWAY III

SHEET NUMBER

02 C-103

Last saved by: CURRANM(2020-02-04) Last Plotted: 2020-02-04
Filename: L:\WORK\60476644 - ORLEANS DOWNTOWN SEWER\C3D - DOWNTOWN_SOURCE DRAWINGS\PS-2 - DOWNTOWN.DWG

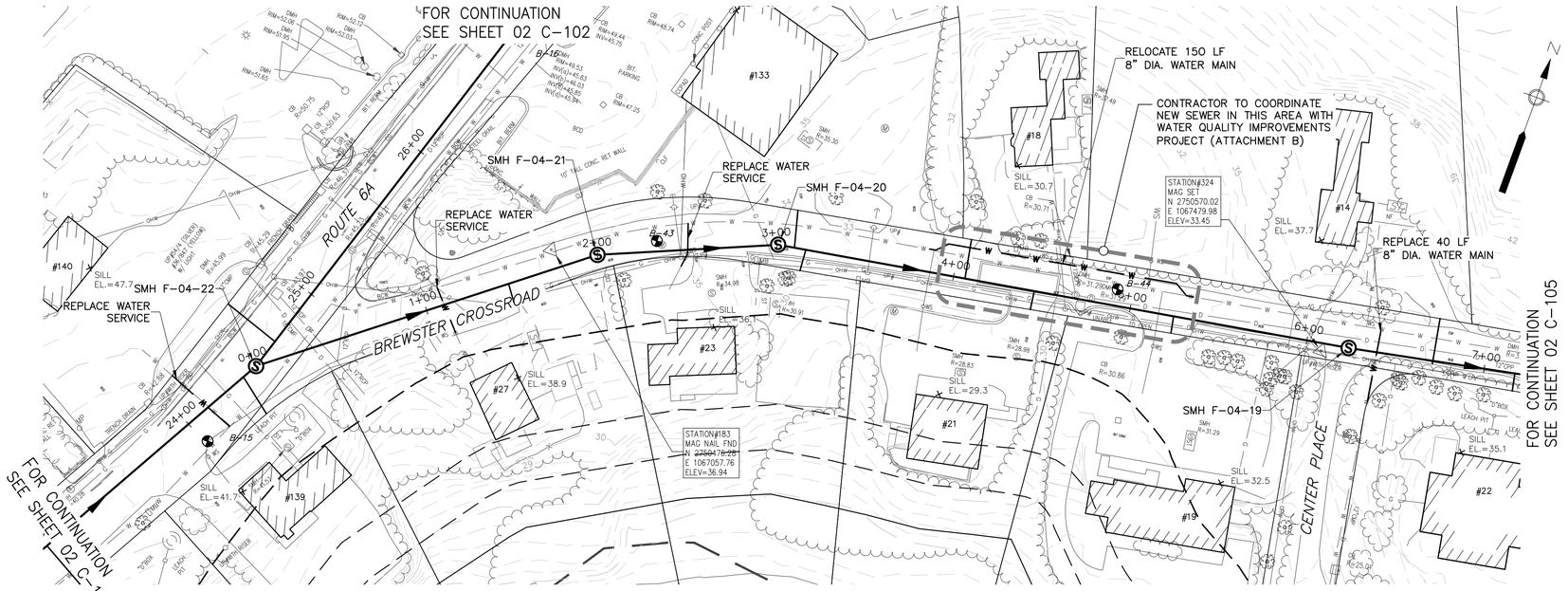

PLAN - BREWSTER CROSSROAD

SCALE: 1"=40'

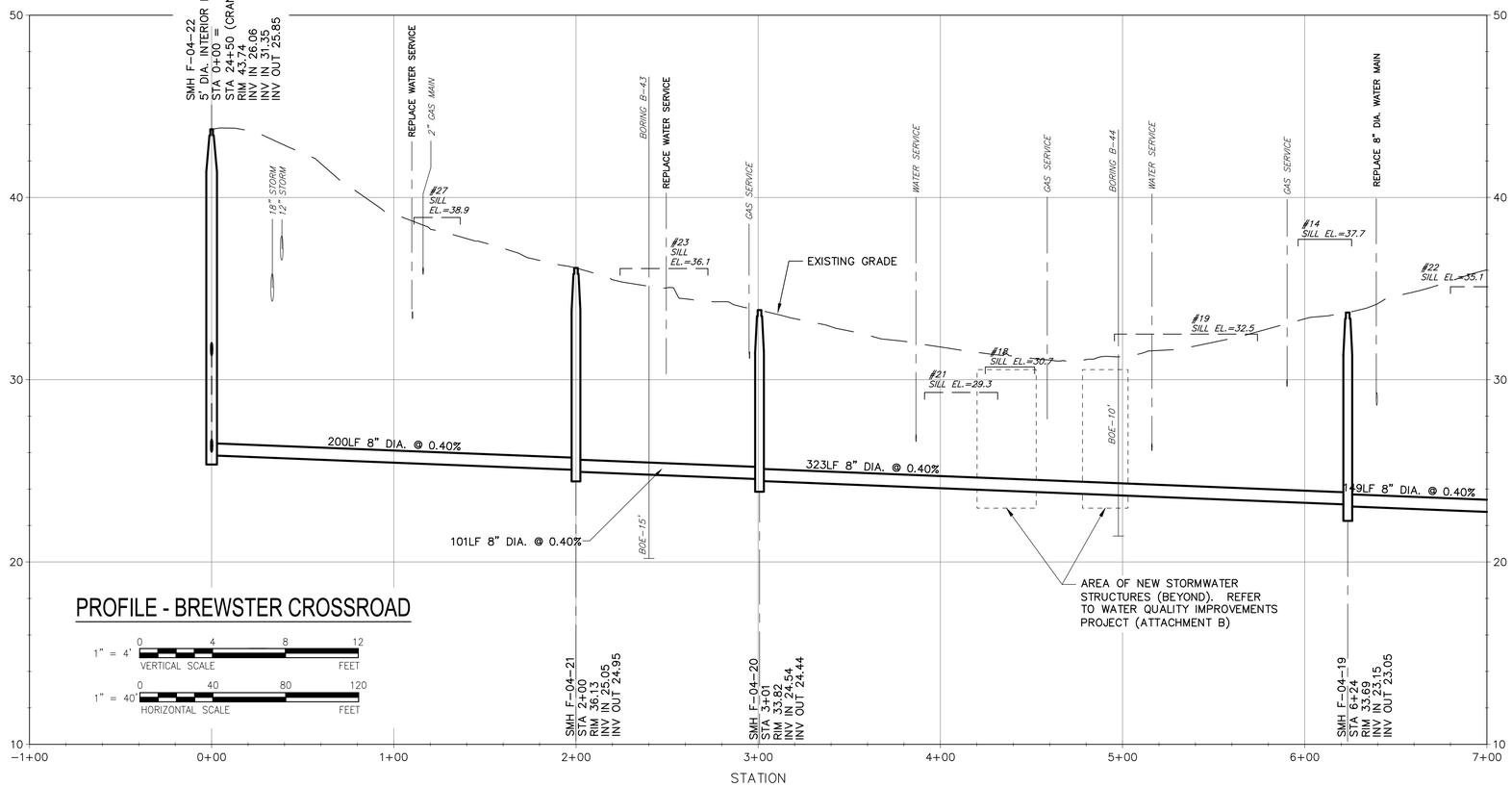

PROFILE - BREWSTER CROSSROAD

1" = 4' VERTICAL SCALE (0, 4, 8, 12 FEET)

1" = 40' HORIZONTAL SCALE (0, 40, 80, 120 FEET)

AECOM

PROJECT

DOWNTOWN AREA COLLECTION SYSTEM AND PUMP STATIONS

CONTRACT No. 2019-02
SRF No. 4486

OWNER

TOWN OF ORLEANS, MA
19 SCHOOL ROAD
ORLEANS, MA 02653
(508) 240-3700

ENGINEER

AECOM TECHNICAL SERVICES, INC.
9 JONATHAN BOURNE DRIVE
POCASSET, MA 02559
PHONE: (508) 833-6950
www.aecom.com

REGISTRATION

COMMONWEALTH OF MASSACHUSETTS
THOMAS E. PARECE
CIVIL
No. 34463
REGISTERED PROFESSIONAL ENGINEER

ISSUE/REVISION

I/R	DATE	DESCRIPTION

PROJECT NUMBER

60587515

Designed By:	M. CURRAN
Drawn By:	M. CURRAN
Dept Check:	T. PARECE
Proj Check:	M. DONOGHUE
Date:	JANUARY 2020
Scale:	AS NOTED

DISCIPLINE

CIVIL

SHEET TITLE

PLAN AND PROFILE SEWER BREWSTER CROSSROAD I

SHEET NUMBER

02 C-104

Last saved by: CURRANM (2020-02-04) Last Plotted: 2020-02-04
Filename: L:\WORK\60476644 - ORLEANS DOWNTOWN SEWER\C3D - DOWNTOWN_SOURCE DRAWINGS\PS-2 - DOWNTOWN.DWG

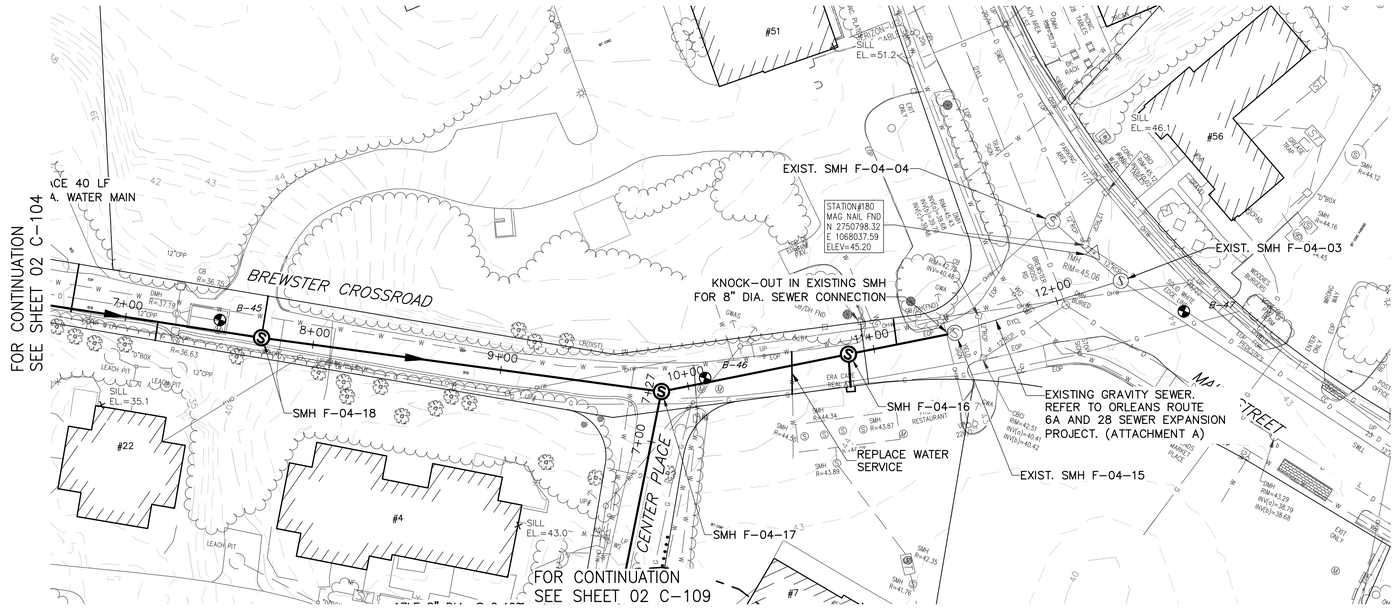

PLAN - BREWSTER CROSSROAD

SCALE: 1"=40'

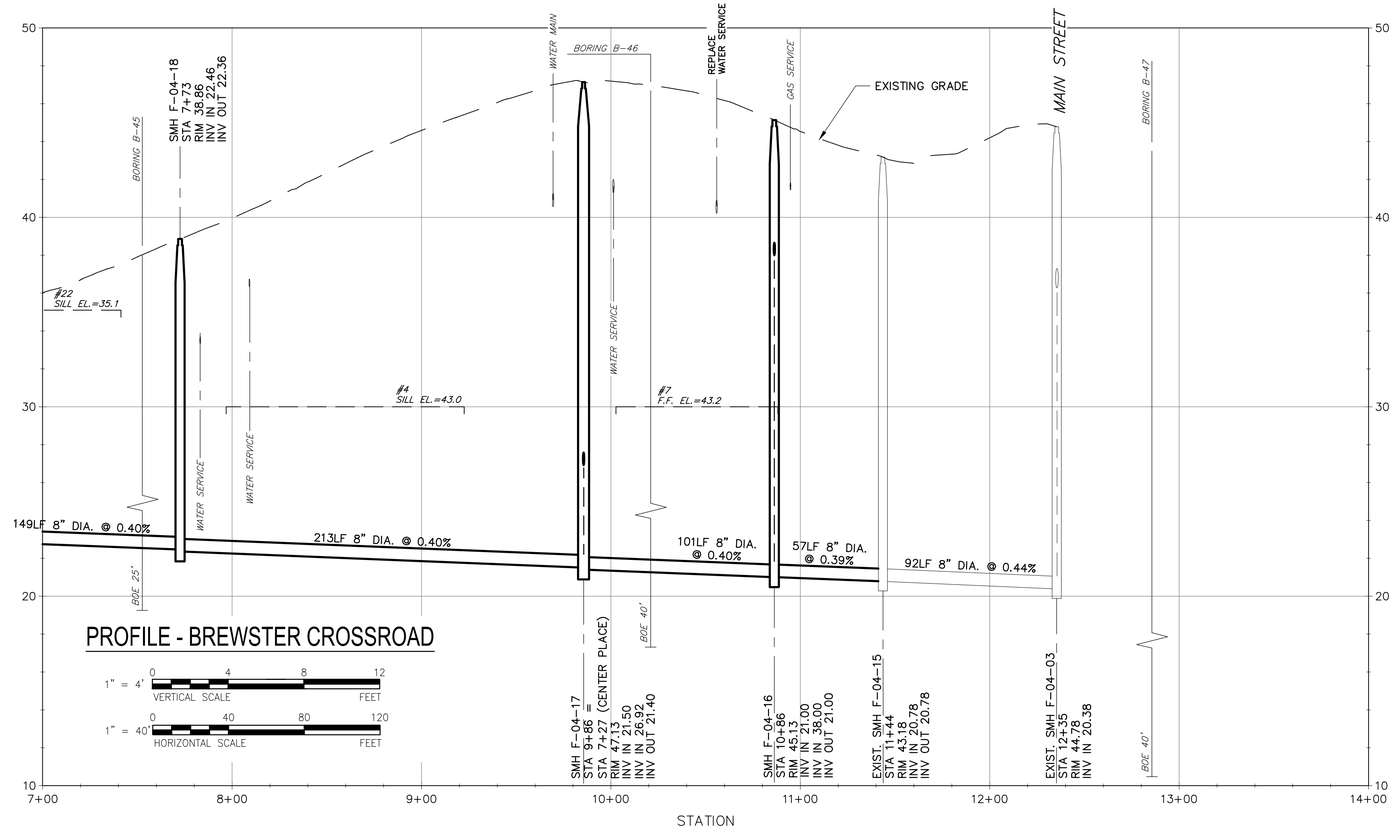

PROFILE - BREWSTER CROSSROAD

1" = 4' VERTICAL SCALE (0, 4, 8, 12 FEET)

1" = 40' HORIZONTAL SCALE (0, 40, 80, 120 FEET)

AECOM

PROJECT

DOWNTOWN AREA
COLLECTION SYSTEM
AND PUMP STATIONS

CONTRACT No. 2019-02
SRF No. 4486

OWNER

TOWN OF ORLEANS, MA
19 SCHOOL ROAD
ORLEANS, MA 02653
(508) 240-3700

ENGINEER

AECOM TECHNICAL SERVICES, INC.
9 JONATHAN BOURNE DRIVE
POCASSET, MA 02559
PHONE: (508) 833-6950
www.aecom.com

REGISTRATION

COMMONWEALTH OF MASSACHUSETTS
THOMAS E. PARECE
CIVIL
No. 34463
REGISTERED PROFESSIONAL ENGINEER

ISSUE/REVISION

I/R	DATE	DESCRIPTION

PROJECT NUMBER

60587515

Designed By:	M. CURRAN
Drawn By:	M. CURRAN
Dept Check:	T. PARECE
Proj Check:	M. DONOGHUE
Date:	JANUARY 2020
Scale:	AS NOTED

DISCIPLINE

CIVIL

SHEET TITLE

PLAN AND PROFILE SEWER
BREWSTER CROSSROAD II

SHEET NUMBER

02 C-105

Last saved by: CURRANM(2020-02-04) Last Plotted: 2020-02-04
Filename: L:\WORK\60\47\6644 - ORLEANS DOWNTOWN SEWER\C3D - DOWNTOWN_SOURCE DRAWINGS\PS-2 - DOWNTOWN.DWG

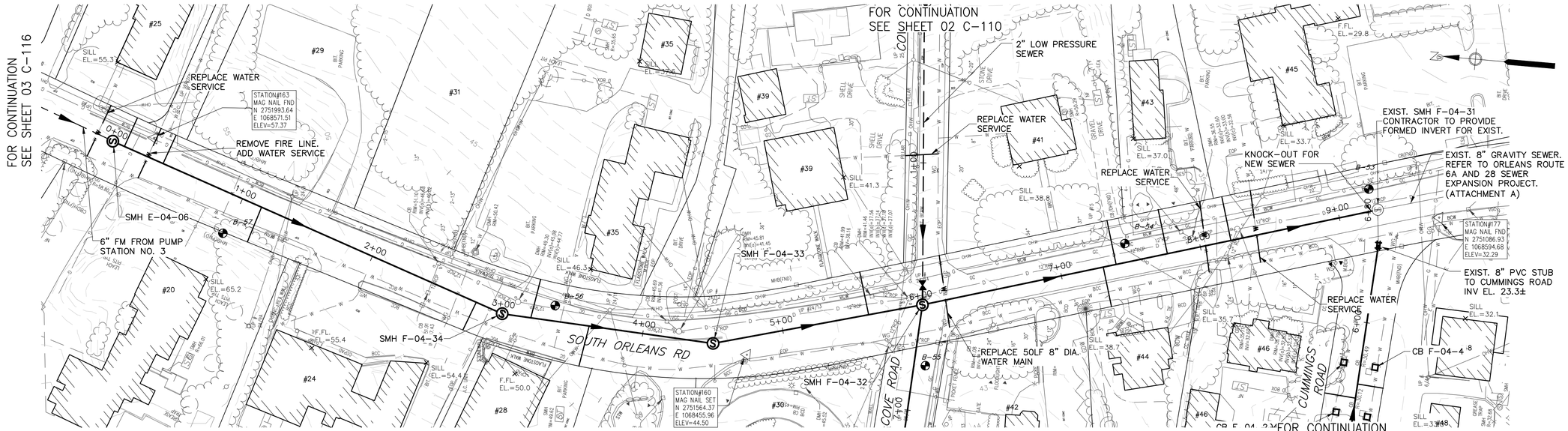

PLAN - SOUTH ORLEANS ROAD

SCALE: 1"=40'

NOTES:
1. CONTRACTOR SHALL ADJUST DRAINAGE AND OTHER UTILITY STRUCTURES WITHIN THE MILLED/PAVED AREAS AS REQUIRED.
2. CONTRACTOR IS RESPONSIBLE FOR ANY AND ALL REPAIRS TO THE DRAINAGE SYSTEM IF IMPACTED BY THIS WORK.

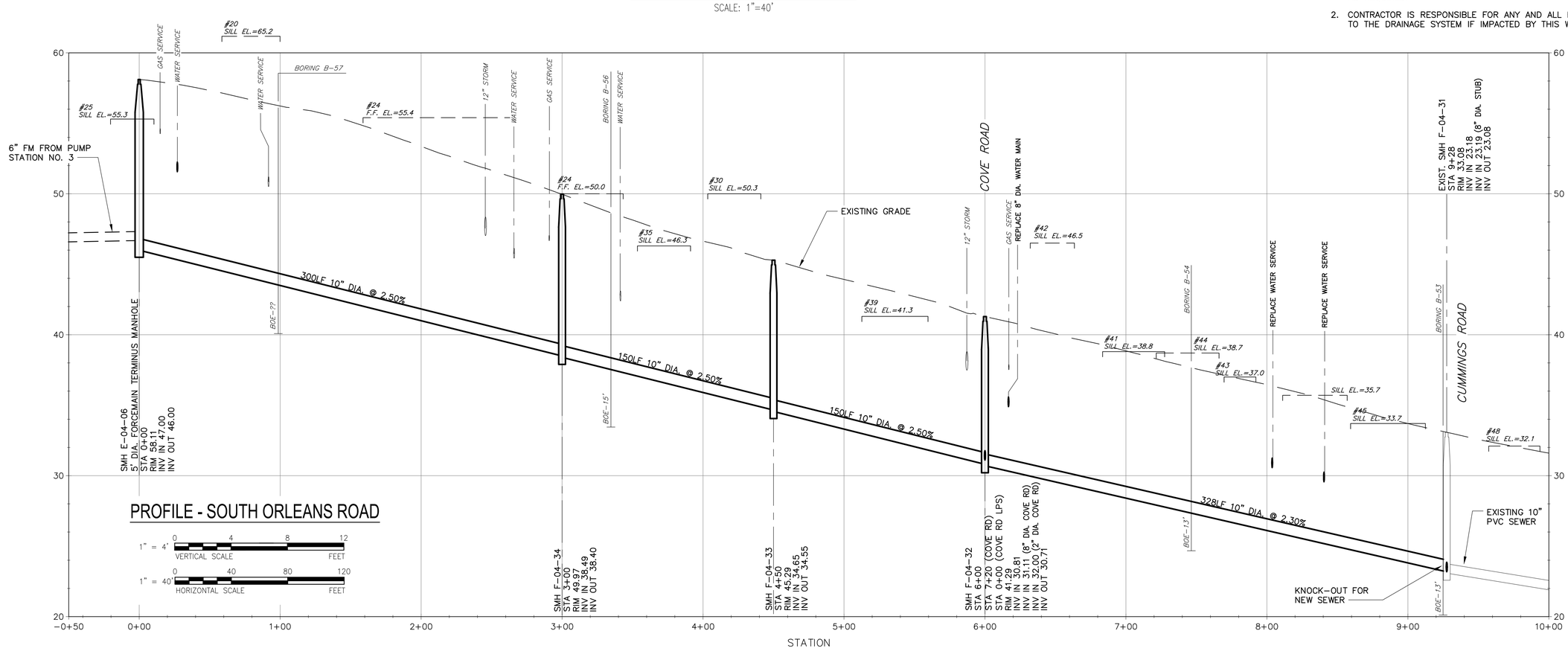

PROFILE - SOUTH ORLEANS ROAD

AECOM

PROJECT

DOWNTOWN AREA COLLECTION SYSTEM AND PUMP STATIONS

CONTRACT No. 2019-02
SRF No. 4486

OWNER

TOWN OF ORLEANS, MA
19 SCHOOL ROAD
ORLEANS, MA 02653
(508) 240-3700

ENGINEER

AECOM TECHNICAL SERVICES, INC.
9 JONATHAN BOURNE DRIVE
POCASSET, MA 02559
PHONE: (508) 833-6950
www.aecom.com

REGISTRATION

COMMONWEALTH OF MASSACHUSETTS
THOMAS E. PARECE
CIVIL
No. 34463
REGISTERED PROFESSIONAL ENGINEER

ISSUE/REVISION

I/R	DATE	DESCRIPTION

PROJECT NUMBER

60587515

Designed By:	M. CURRAN
Drawn By:	M. CURRAN
Dept Check:	T. PARECE
Proj Check:	M. DONOGHUE
Date:	JANUARY 2020
Scale:	AS NOTED

DISCIPLINE

CIVIL

SHEET TITLE

PLAN AND PROFILE SEWER SOUTH ORLEANS ROAD

SHEET NUMBER

02 C-106

Last saved by: CURRANM(2020-02-04) Last Plotted: 2020-02-04
Filename: L:\WORK\60478644 - ORLEANS DOWNTOWN SEWER\C3D - DOWNTOWN_SOURCE DRAWINGS\PS-2 - DOWNTOWN.DWG

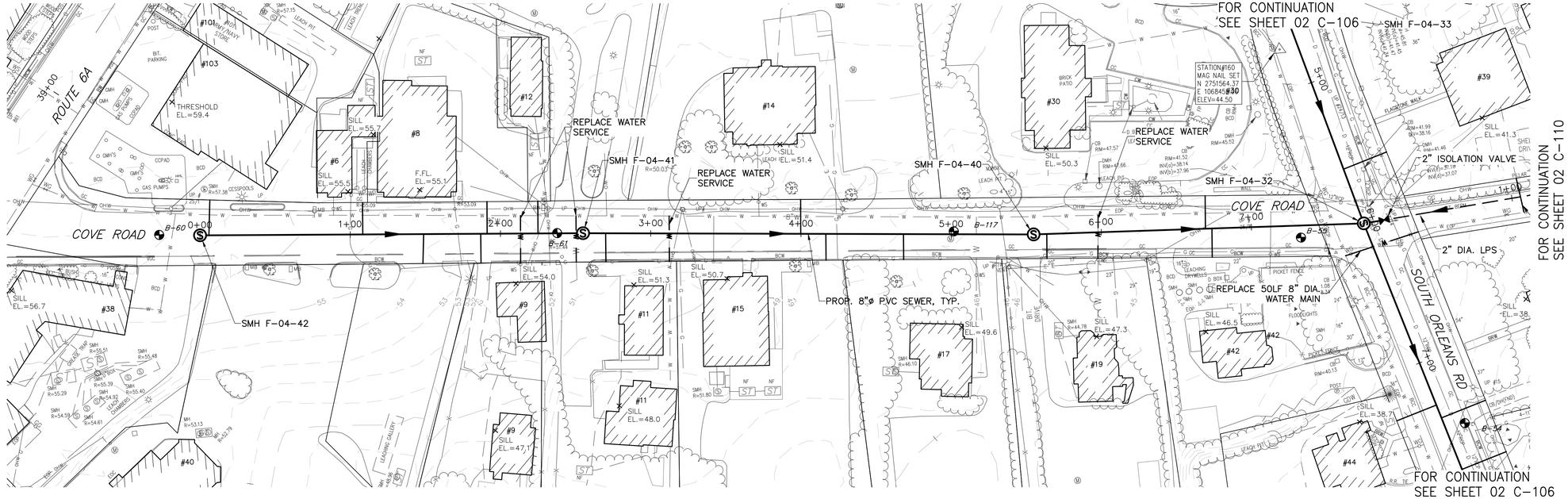

PLAN - COVE ROAD

SCALE: 1"=40'

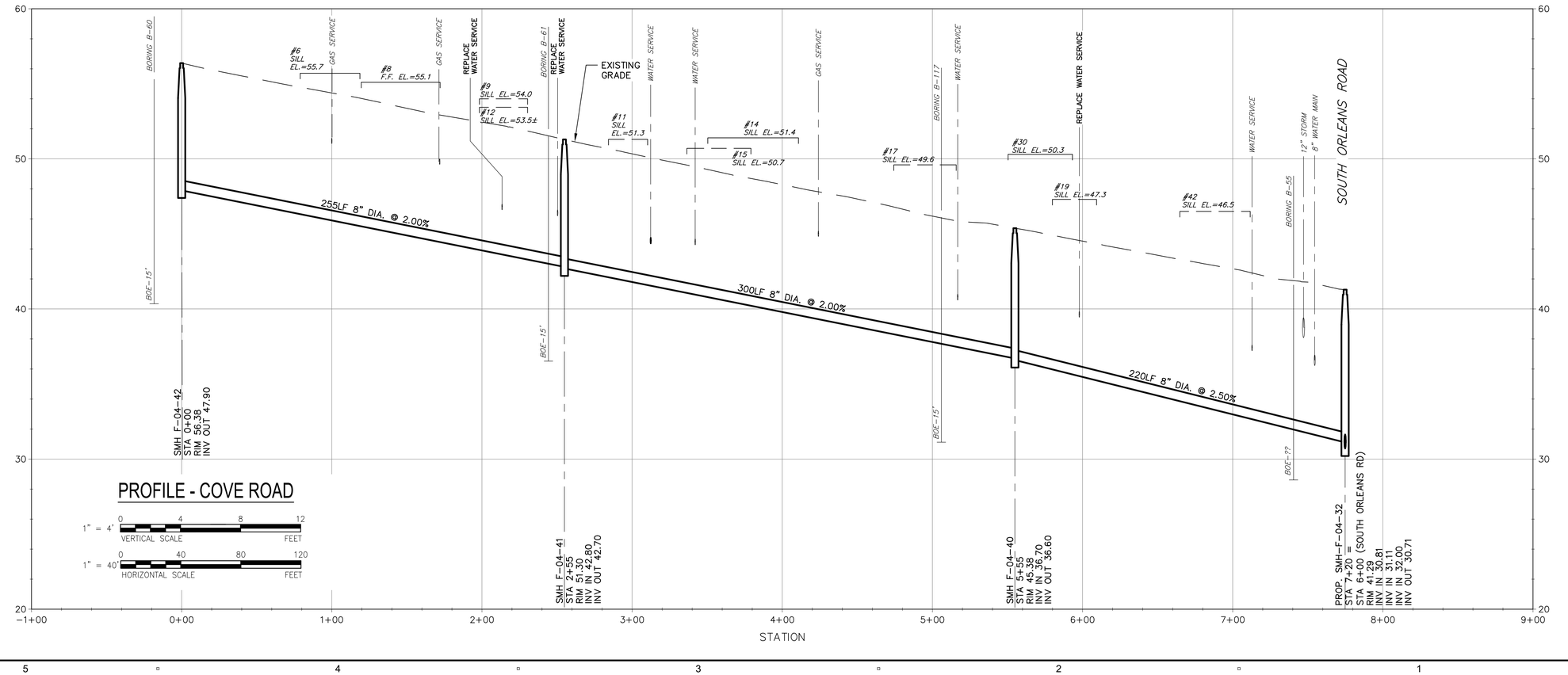

AECOM

PROJECT

DOWNTOWN AREA COLLECTION SYSTEM AND PUMP STATIONS

CONTRACT No. 2019-02
SRF No. 4486

OWNER

TOWN OF ORLEANS, MA
19 SCHOOL ROAD
ORLEANS, MA 02653
(508) 240-3700

ENGINEER

AECOM TECHNICAL SERVICES, INC.
9 JONATHAN BOURNE DRIVE
POCASSET, MA 02559
PHONE: (508) 833-6950
www.aecom.com

REGISTRATION

COMMONWEALTH OF MASSACHUSETTS
THOMAS E. PARECE
CIVIL
No. 34463
REGISTERED PROFESSIONAL ENGINEER
10/19/2020

ISSUE/REVISION

I/R	DATE	DESCRIPTION

PROJECT NUMBER

60587515

Designed By:	M. CURRAN
Drawn By:	M. CURRAN
Dept Check:	T. PARECE
Proj Check:	M. DONOGHUE
Date:	JANUARY 2020
Scale:	AS NOTED

DISCIPLINE

CIVIL

SHEET TITLE

PLAN AND PROFILE SEWER COVE ROAD

SHEET NUMBER

02 C-107

Last saved by: CURRANM(2020-02-04) Last Plotted: 2020-02-04
Filename: L:\WORK\60\47\6644 - ORLEANS DOWNTOWN SEWER\C3D - DOWNTOWN_SOURCE DRAWINGS\PS-2 - DOWNTOWN.DWG

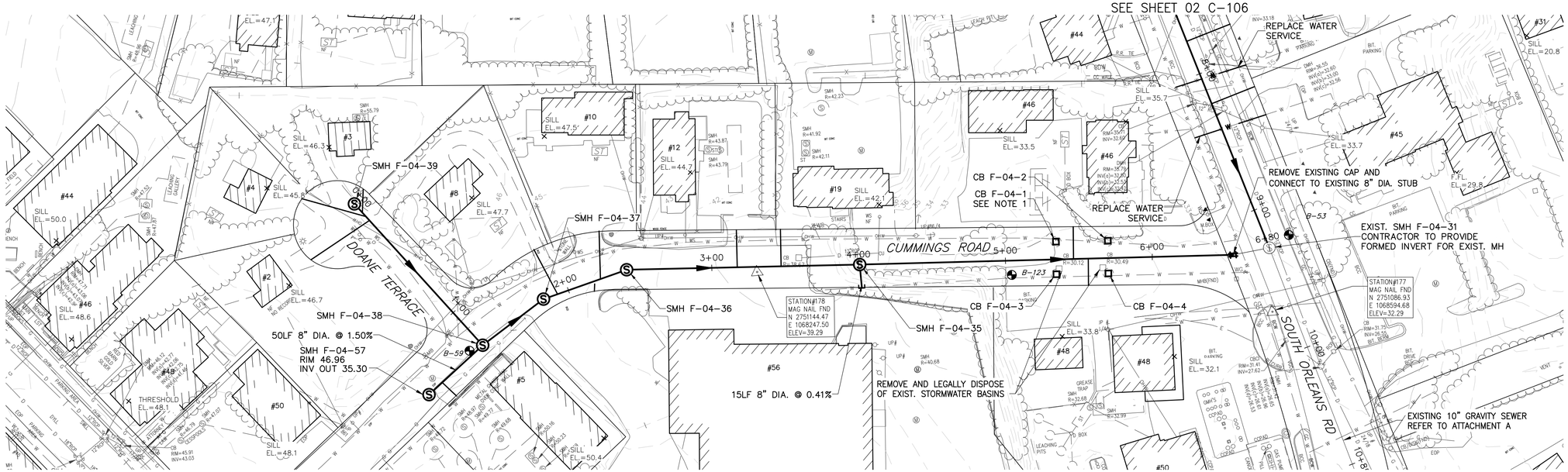

PLAN - DOANE TERRACE AND CUMMINGS ROAD

SCALE: 1"=40'

NOTE:

1. FINAL LOCATION OF LEACHING CATCH BASINS TO BE DETERMINED IN THE FIELD. SEE DETAIL ON SHEET 99 C-501.

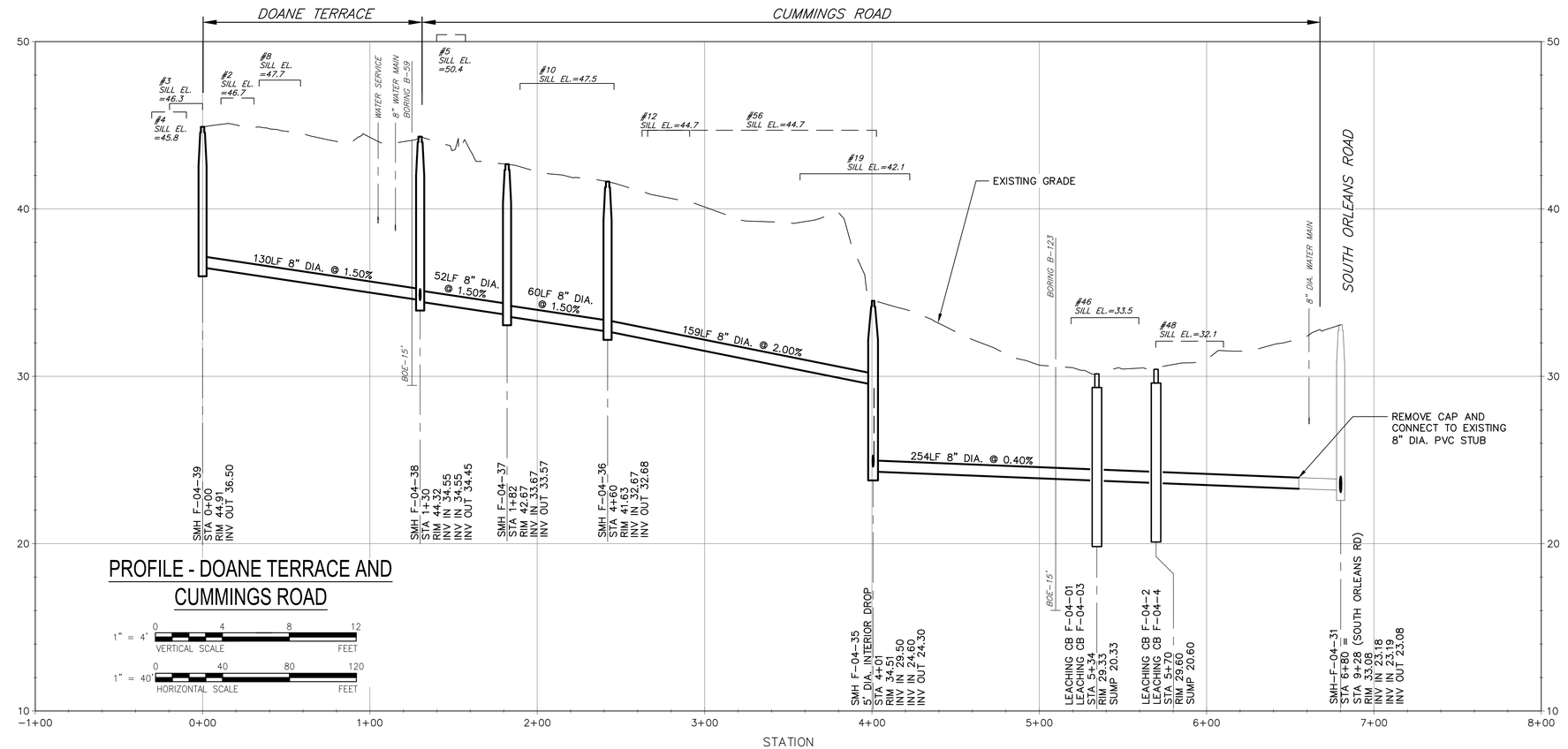

PROFILE - DOANE TERRACE AND CUMMINGS ROAD

1" = 4' VERTICAL SCALE 0 4 8 12 FEET

1" = 40' HORIZONTAL SCALE 0 40 80 120 FEET

AECOM

PROJECT

DOWNTOWN AREA COLLECTION SYSTEM AND PUMP STATIONS

CONTRACT No. 2019-02
SRF No. 4486

OWNER

TOWN OF ORLEANS, MA
19 SCHOOL ROAD
ORLEANS, MA 02653
(508) 240-3700

ENGINEER

AECOM TECHNICAL SERVICES, INC.
9 JONATHAN BOURNE DRIVE
POCASSET, MA 02559
PHONE: (508) 833-6950
www.aecom.com

REGISTRATION

COMMONWEALTH OF MASSACHUSETTS
THOMAS E. PARECE
CIVIL
No. 34463
REGISTERED PROFESSIONAL ENGINEER

ISSUE/REVISION

I/R	DATE	DESCRIPTION

PROJECT NUMBER

60587515

Designed By:	M. CURRAN
Drawn By:	M. CURRAN
Dept Check:	T. PARECE
Proj Check:	M. DONOGHUE
Date:	JANUARY 2020
Scale:	AS NOTED

DISCIPLINE

CIVIL

SHEET TITLE

PLAN AND PROFILE SEWER DOANE AND CUMMINGS ROAD

SHEET NUMBER

02 C-108

Last saved by: CURRANM (2020-02-04) Last Plotted: 2020-02-04
Filename: L:\WORK\60478644 - ORLEANS DOWNTOWN SEWER\C3D - DOWNTOWN_SOURCE DRAWINGS\PS-2 - DOWNTOWN.DWG

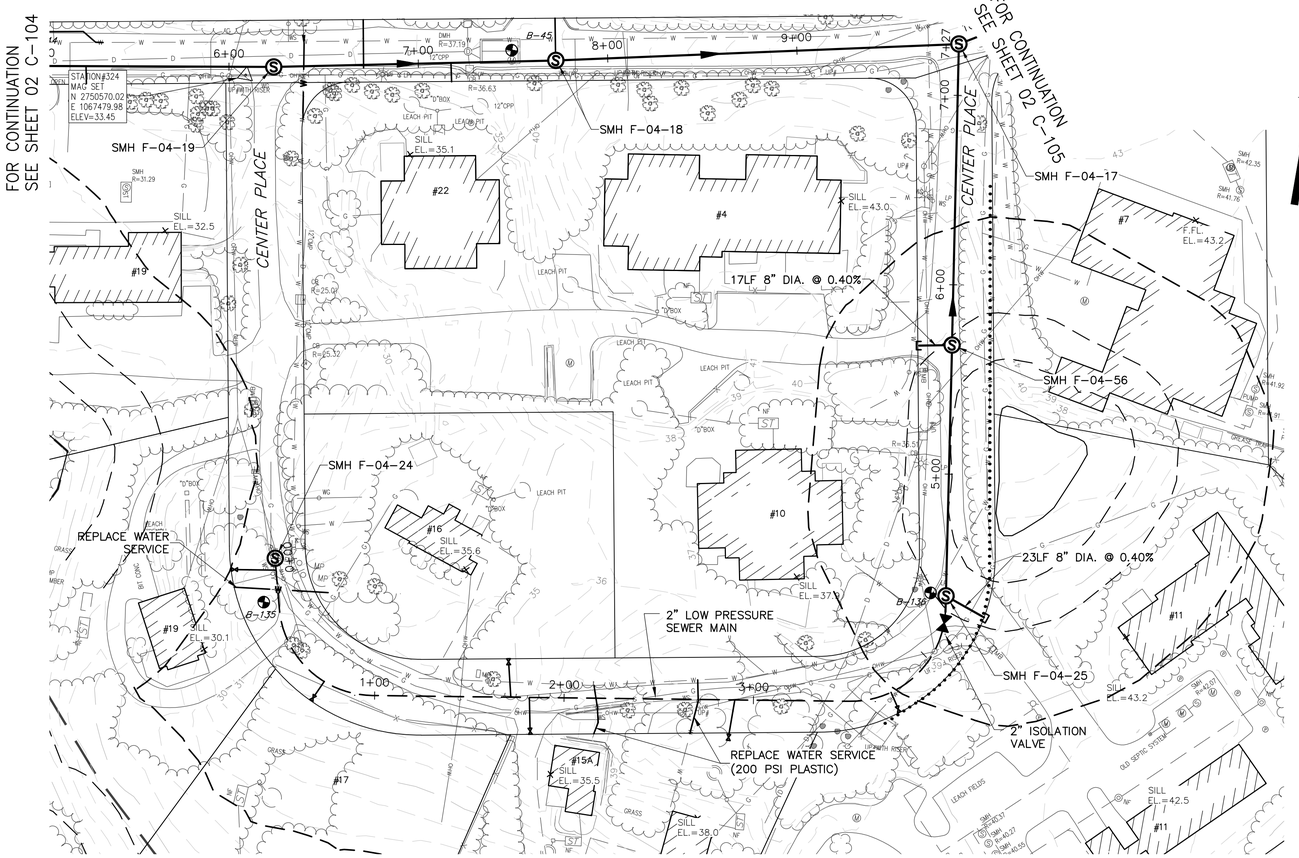

PLAN - CENTER PLACE

SCALE: 1"=40'

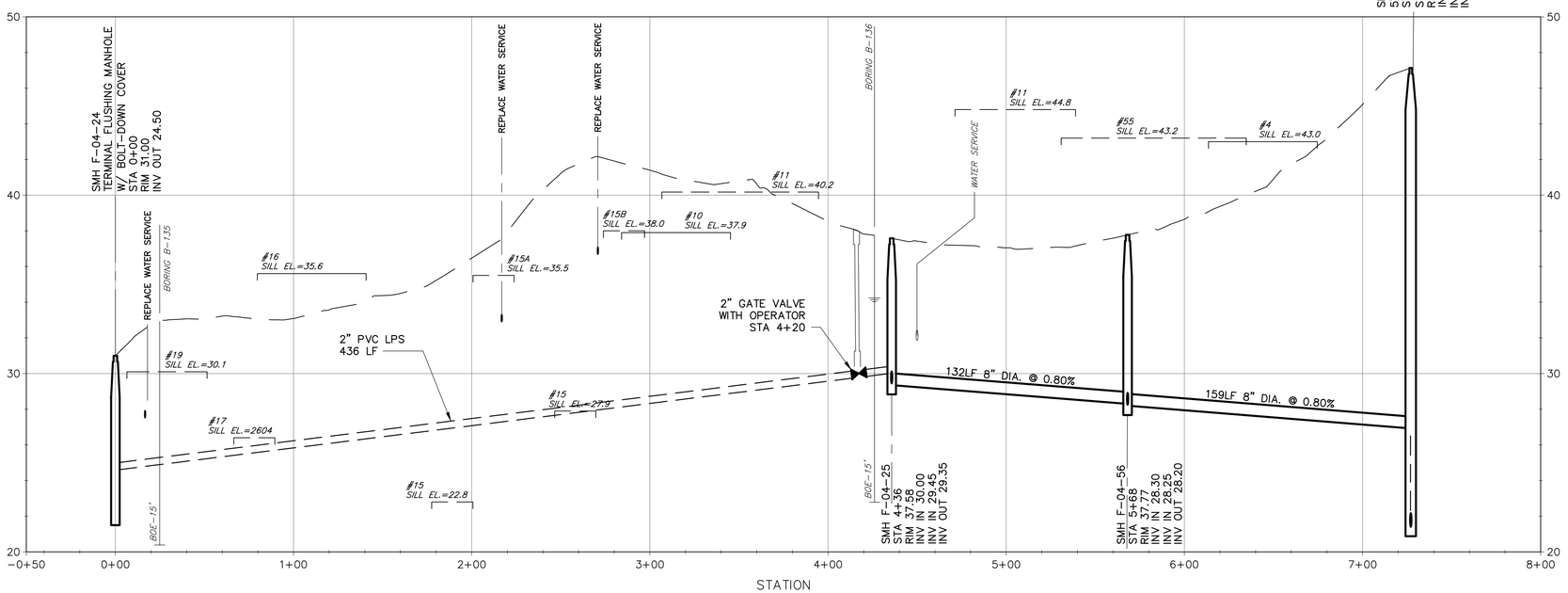

PROFILE - CENTER PLACE

1" = 4' VERTICAL SCALE: 0, 4, 8, 12 FEET

1" = 40' HORIZONTAL SCALE: 0, 40, 80, 120 FEET

Last saved by: CURRANM(2020-02-04) Last Plotted: 2020-02-04
Filename: L:\WORK\60476644 - ORLEANS DOWNTOWN SEWER\C3D - DOWNTOWN_SOURCE DRAWINGS\PS-2 - DOWNTOWN.DWG

AECOM

PROJECT

DOWNTOWN AREA COLLECTION SYSTEM AND PUMP STATIONS

CONTRACT No. 2019-02
SRF No. 4486

OWNER

TOWN OF ORLEANS, MA
19 SCHOOL ROAD
ORLEANS, MA 02653
(508) 240-3700

ENGINEER

AECOM TECHNICAL SERVICES, INC.
9 JONATHAN BOURNE DRIVE
POCASSET, MA 02559
PHONE: (508) 833-6950
www.aecom.com

REGISTRATION

COMMONWEALTH OF MASSACHUSETTS
THOMAS E. PARECE
CIVIL
No. 34483
REGISTERED PROFESSIONAL ENGINEER

ISSUE/REVISION

I/R	DATE	DESCRIPTION

PROJECT NUMBER

60587515

Designed By:	M. CURRAN
Drawn By:	M. CURRAN
Dept Check:	T. PARECE
Proj Check:	M. DONOGHUE
Date:	JANUARY 2020
Scale:	AS NOTED

DISCIPLINE

CIVIL

SHEET TITLE

PLAN AND PROFILE SEWER CENTER PLACE

SHEET NUMBER

02 C-109

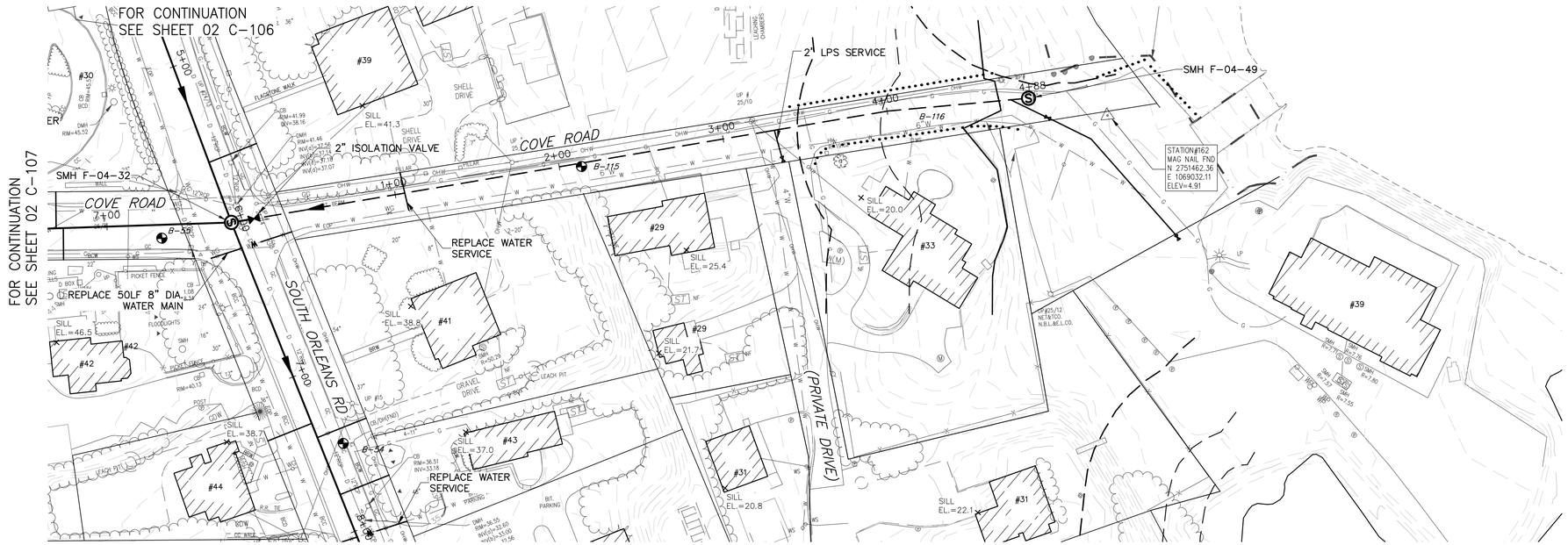

FOR CONTINUATION
SEE SHEET 02 C-106

PLAN - COVE ROAD

SCALE: 1"=40'

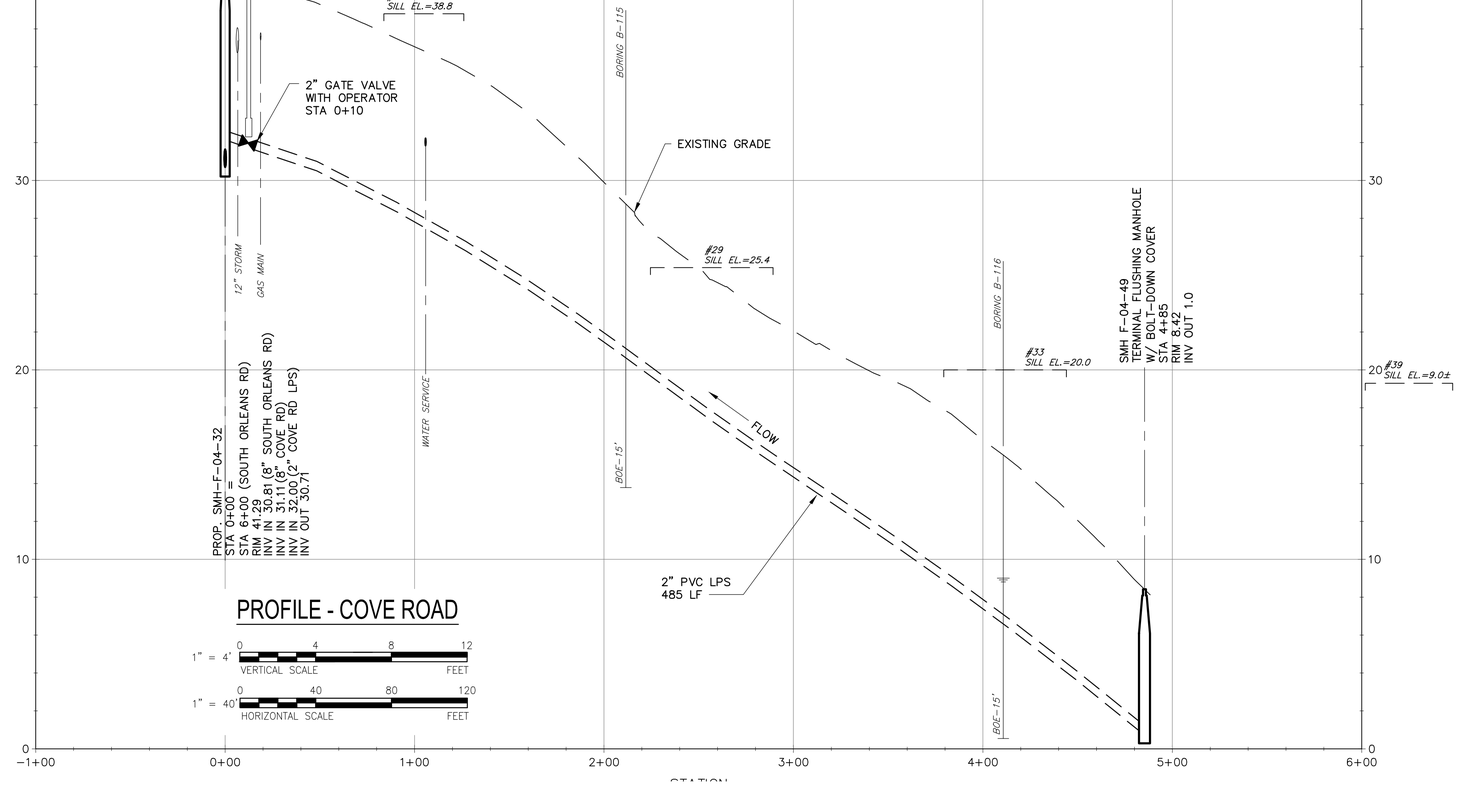

PROFILE - COVE ROAD

1" = 4' VERTICAL SCALE: 0, 4, 8, 12 FEET

1" = 40' HORIZONTAL SCALE: 0, 40, 80, 120 FEET

AECOM

PROJECT

DOWNTOWN AREA COLLECTION SYSTEM AND PUMP STATIONS

CONTRACT No. 2019-02
SRF No. 4486

OWNER

TOWN OF ORLEANS, MA
19 SCHOOL ROAD
ORLEANS, MA 02653
(508) 240-3700

ENGINEER

AECOM TECHNICAL SERVICES, INC.
9 JONATHAN BOURNE DRIVE
POCASSET, MA 02559
PHONE: (508) 833-6950
www.aecom.com

REGISTRATION

COMMONWEALTH OF MASSACHUSETTS
THOMAS E. PARECE
CIVIL
No. 34483
REGISTERED PROFESSIONAL ENGINEER
7/31/2020

ISSUE/REVISION

I/R	DATE	DESCRIPTION

PROJECT NUMBER

60587515

Designed By:	M. CURRAN
Drawn By:	M. CURRAN
Dept Check:	T. PARECE
Proj Check:	M. DONOGHUE
Date:	JANUARY 2020
Scale:	AS NOTED

DISCIPLINE

CIVIL

SHEET TITLE

PLAN AND PROFILE SEWER COVE ROAD II

SHEET NUMBER

02 C-110

Last saved by: CURRANM(2020-02-04) Last Plotted: 2020-02-04
Filename: L:\WORK\60476644 - ORLEANS DOWNTOWN SEWER\C3D - DOWNTOWN_SOURCE DRAWINGS\PS-2 - DOWNTOWN.DWG

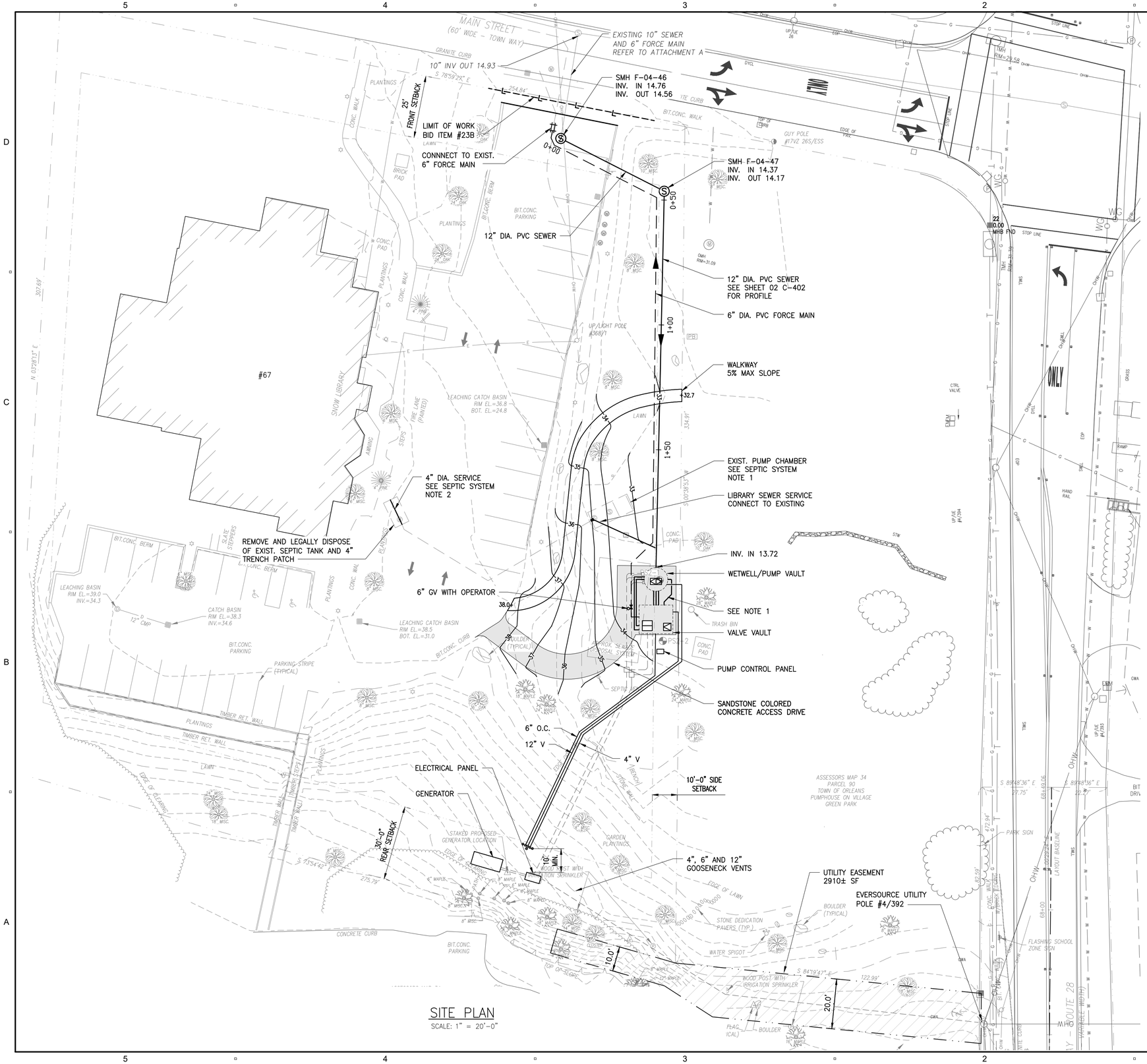

SITE PLAN

SCALE: 1" = 20'-0"

SEPTIC SYSTEM NOTES:

1. ABANDON PUMP CHAMBER AT CONTROL PANEL, REMOVE PUMPS AND ACCESSORIES, PUNCTURE BOTTOM, CRUSH CHAMBER AND BACKFILL.
2. PUMP SEPTIC TANK, BREAK BOTTOM, CRUSH TANK, BACKFILL, CONNECT NEW SEWER, BACKFILL AND PATCH PAVEMENT

NOTES:

1. FOR PUMP STATION PIPING, REFER TO MECHANICAL PROCESS DRAWINGS.
2. FOR POWER AND GROUNDING, SEE ELECTRICAL DRAWINGS.
3. FOR PUMP STATION CONTROLS, REFER TO INSTRUMENTATION DRAWINGS.
4. FOR PLANTING PLAN, REFER TO ATTACHMENT D, SHEET NO. 001, TITLED "SITE PLAN – PROPOSED PUMP STATION LAYOUT OPTION 2", DATED OCTOBER 2018.

REFFERENCE SURVEY

SURVEY FOR THIS SITE PROVIDED BY COASTAL ENGINEERING COMPANY, INC, 260 CRANBERRY HIGHWAY, ORLEANS, MA 02653.

PROJECT	"AECOM – SNOW LIBRARY"
PROJECT NO.	C18686.01
SHEET TITLE	"PLAN SHOWING EXISTING SITE CONDITIONS"
SHEET NO.	C1.2.1 REV 1

1" = 20' — SCALE: 0, 20, 40, 60 FEET

N

AECOM

PROJECT

DOWNTOWN AREA COLLECTION SYSTEM AND PUMP STATIONS

CONTRACT No. 2019-02
SRF No. 4486

OWNER

TOWN OF ORLEANS, MA

19 SCHOOL ROAD
ORLEANS, MA 02653
(508) 240-3700

ENGINEER

AECOM TECHNICAL SERVICES, INC.
9 JONATHAN BOURNE DRIVE
POCASSET, MA 02559
PHONE: (508) 833-6950
www.aecom.com

REGISTRATION

COMMONWEALTH OF MASSACHUSETTS
THOMAS E. PARECE
CIVIL
No. 34463
REGISTERED PROFESSIONAL ENGINEER

ISSUE/REVISION

I/R	DATE	DESCRIPTION

PROJECT NUMBER

60587515

Designed By:	M. CURRAN
Drawn By:	M. CURRAN
Dept Check:	T. PARECE
Proj Check:	M. DONOGHUE
Date:	JANUARY 2020
Scale:	AS NOTED

DISCIPLINE

CIVIL

SHEET TITLE

PUMP STATION NO. 2
SITE PLAN

SHEET NUMBER

02 C-401

Last saved by: CURRANM(2020-02-03) Last Plotted: 2020-02-04
Filename: P:\60476644 - ORLEANS DOWNTOWN PUMP STATIONS\SHEETS\C02 C-401.DWG

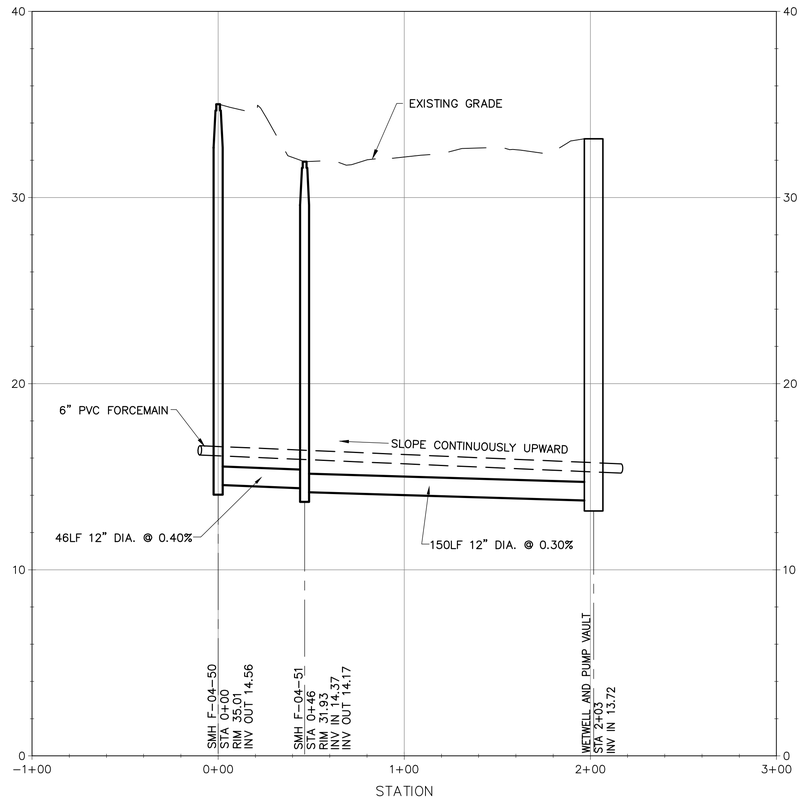

PROFILE - MAIN STREET TO PUMP STATION NO. 2

1" = 4' VERTICAL SCALE: 0, 4, 8, 12 FEET

1" = 40' HORIZONTAL SCALE: 0, 40, 80, 120 FEET

AECOM

PROJECT

DOWNTOWN AREA
COLLECTION SYSTEM
AND PUMP STATIONS

CONTRACT No. 2019-02
SRF No. 4486

OWNER

TOWN OF ORLEANS, MA
19 SCHOOL ROAD
ORLEANS, MA 02653
(508) 240-3700

ENGINEER

AECOM TECHNICAL SERVICES, INC.
9 JONATHAN BOURNE DRIVE
POCASSET, MA 02559
PHONE: (508) 833-6950
www.aecom.com

REGISTRATION

COMMONWEALTH OF MASSACHUSETTS
THOMAS E. PARECE
CIVIL
No. 34483
REGISTERED PROFESSIONAL ENGINEER

ISSUE/REVISION

I/R	DATE	DESCRIPTION

PROJECT NUMBER

60587515

Designed By:	M. CURRAN
Drawn By:	M. CURRAN
Dept Check:	C. BENZIGER
Proj Check:	M. DONOGHUE
Date:	JANUARY 2020
Scale:	AS NOTED

DISCIPLINE

CIVIL

SHEET TITLE

PROFILE SEWER
MAIN STREET TO
PUMP STATION NO. 2

SHEET NUMBER

02 C-402

Last saved by: CURRANM(2020-02-04) Last Plotted: 2020-02-04
Filename: L:\WORK\60\47\6644 - ORLEANS DOWNTOWN SEWER\C3D - DOWNTOWN_SOURCE DRAWINGS\PS-2 - DOWNTOWN.DWG

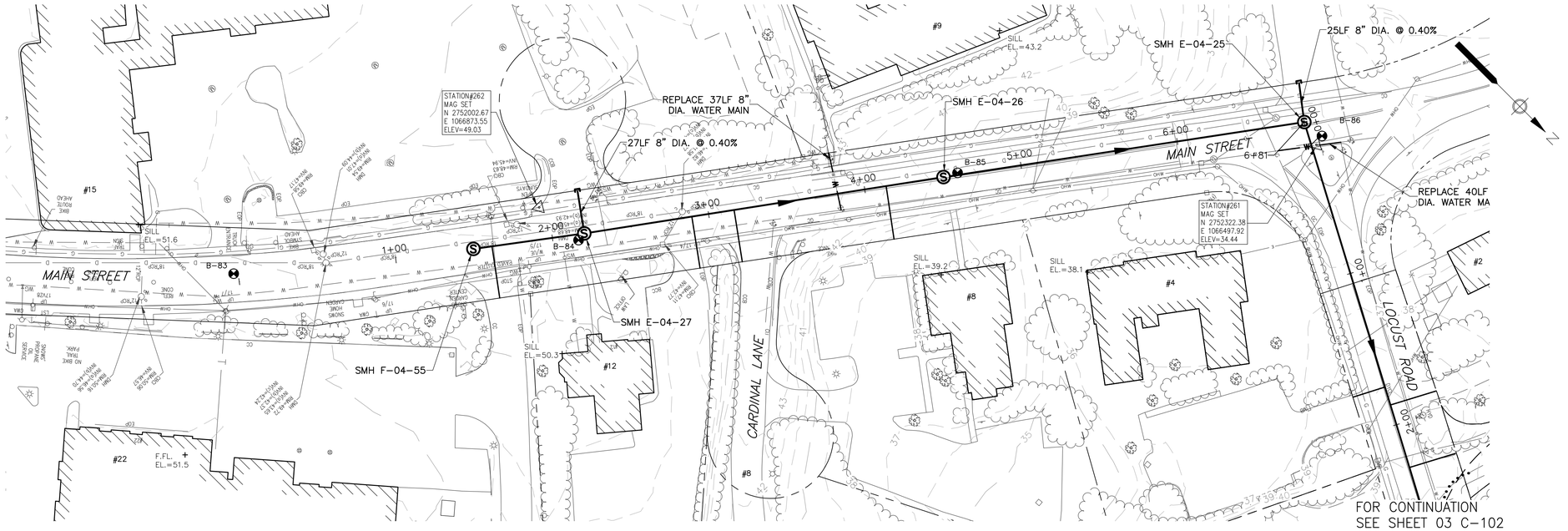

PLAN -MAIN STREET

SCALE: 1"=40'

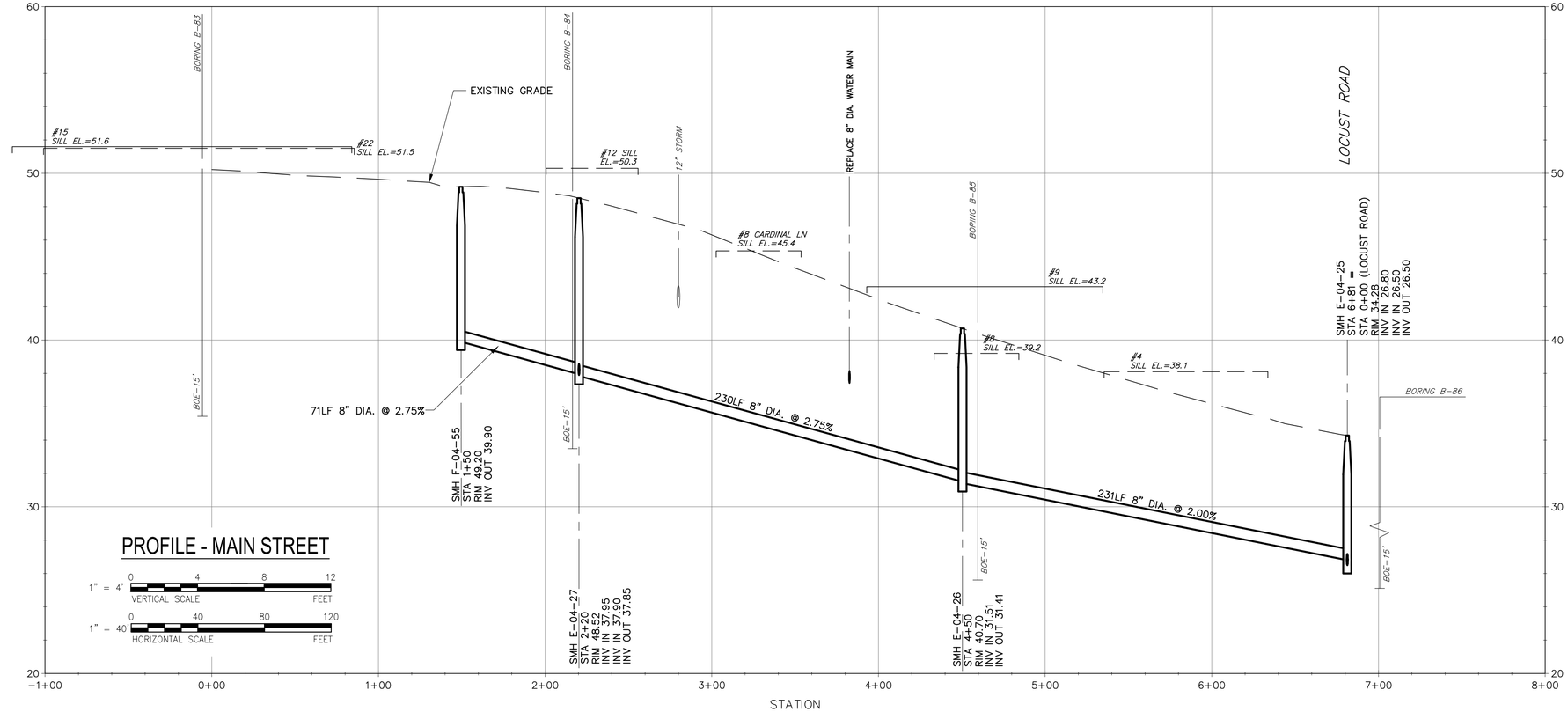

PROFILE - MAIN STREET

1" = 4' VERTICAL SCALE 0 4 8 12 FEET

1" = 40' HORIZONTAL SCALE 0 40 80 120 FEET

Last saved by: CURRANM(2020-02-04) Last Plotted: 2020-02-04
Filename: L:\WORK\60477644 - ORLEANS DOWNTOWN SEWER\C3D - DOWNTOWN_SOURCE DRAWINGS\PS-3 - DOWNTOWN.DWG

AECOM

PROJECT

DOWNTOWN AREA COLLECTION SYSTEM AND PUMP STATIONS

CONTRACT No. 2019-02
SRF No. 4486

OWNER

TOWN OF ORLEANS, MA
19 SCHOOL ROAD
ORLEANS, MA 02653
(508) 240-3700

ENGINEER

AECOM TECHNICAL SERVICES, INC.
9 JONATHAN BOURNE DRIVE
POCASSET, MA 02559
PHONE: (508) 833-6950
www.aecom.com

REGISTRATION

COMMONWEALTH OF MASSACHUSETTS
THOMAS E. PARECE
CIVIL
No. 34483
REGISTERED PROFESSIONAL ENGINEER
2020

ISSUE/REVISION

I/R	DATE	DESCRIPTION

PROJECT NUMBER

60587515

Designed By:	M. CURRAN
Drawn By:	M. CURRAN
Dept Check:	T. PARECE
Proj Check:	M. DONOGHUE
Date:	JANUARY 2020
Scale:	AS NOTED

DISCIPLINE

CIVIL

SHEET TITLE

PLAN AND PROFILE SEWER MAIN STREET

SHEET NUMBER

03 C-101

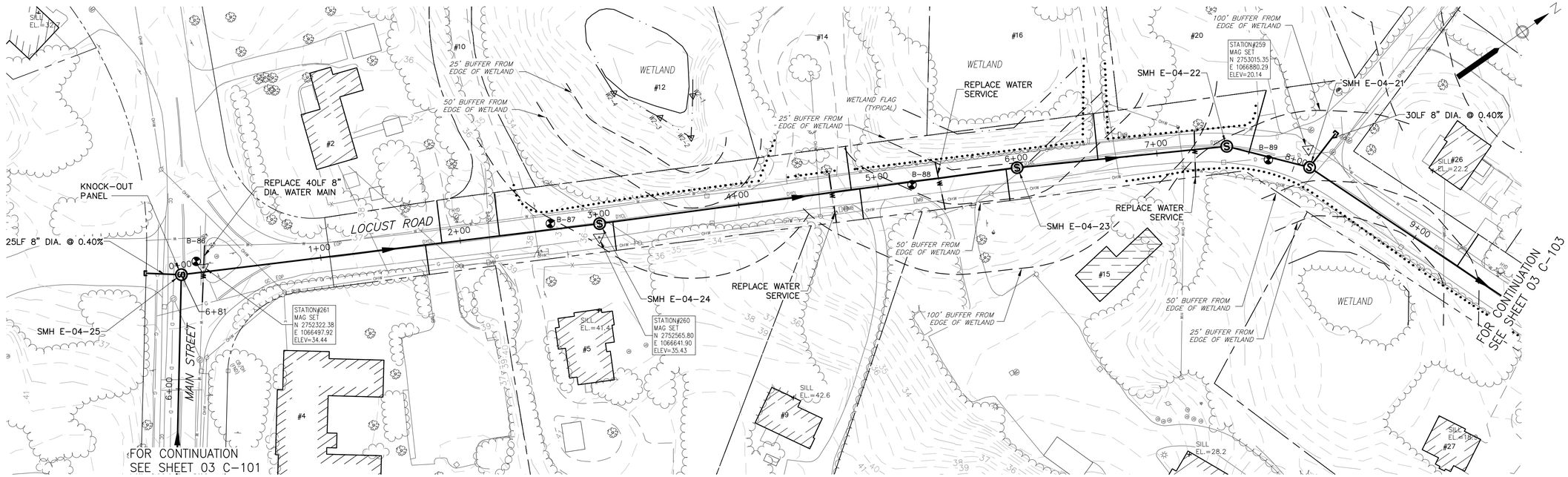

PLAN - LOCUST ROAD

SCALE: 1"=40'

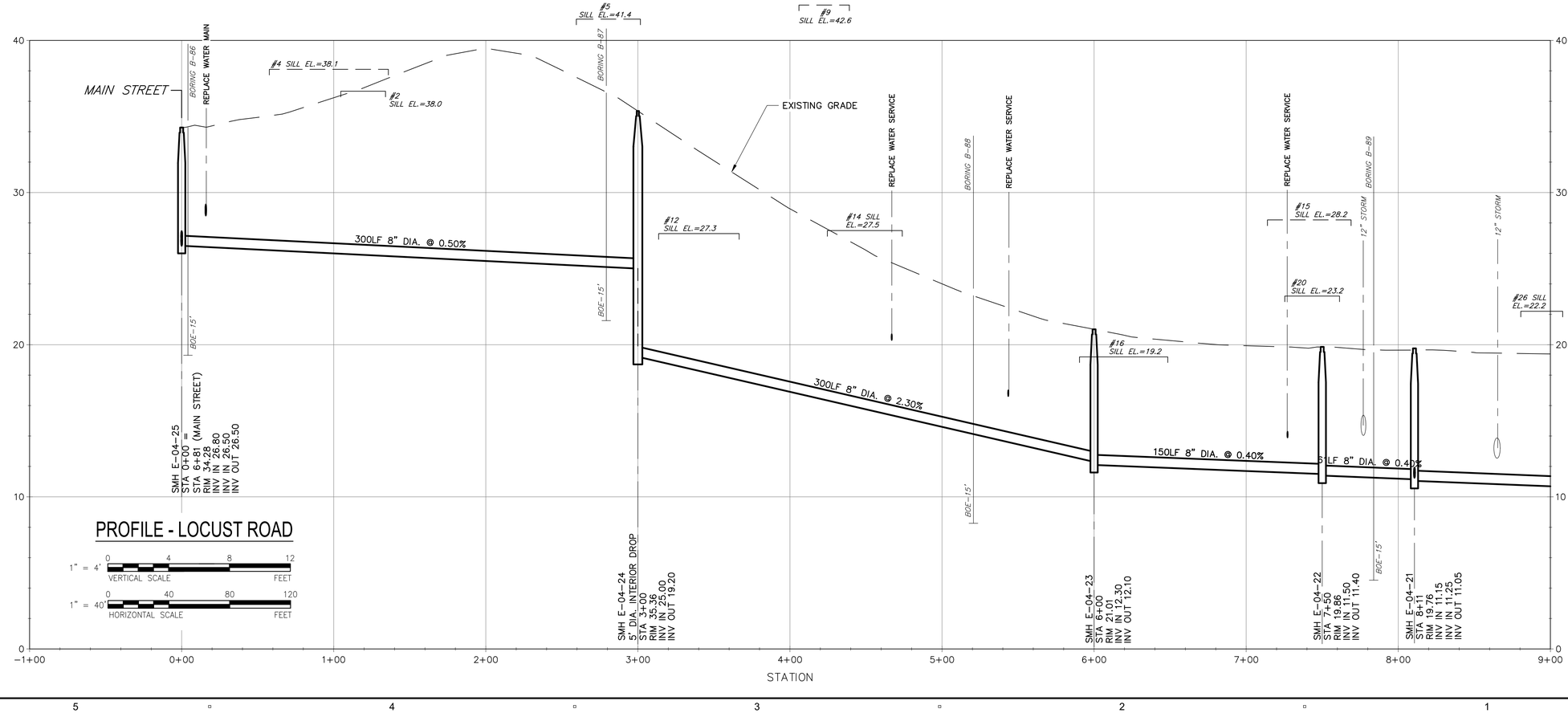

PROFILE - LOCUST ROAD

1" = 4' VERTICAL SCALE (0, 4, 8, 12 FEET)

1" = 40' HORIZONTAL SCALE (0, 40, 80, 120 FEET)

Last saved by: CURRANM(2020-02-04) Last Plotted: 2020-02-04
Filename: L:\WORK\60476644 - ORLEANS DOWNTOWN SEWER\C3D - DOWNTOWN_SOURCE DRAWINGS\PS-3 - DOWNTOWN.DWG

AECOM

PROJECT

DOWNTOWN AREA COLLECTION SYSTEM AND PUMP STATIONS

CONTRACT No. 2019-02
SRF No. 4486

OWNER

TOWN OF ORLEANS, MA
19 SCHOOL ROAD
ORLEANS, MA 02653
(508) 240-3700

ENGINEER

AECOM TECHNICAL SERVICES, INC.
9 JONATHAN BOURNE DRIVE
POCASSET, MA 02559
PHONE: (508) 833-6950
www.aecom.com

REGISTRATION

COMMONWEALTH OF MASSACHUSETTS
THOMAS E. PARECE
CIVIL
No. 34463
REGISTERED PROFESSIONAL ENGINEER

ISSUE/REVISION

I/R	DATE	DESCRIPTION

PROJECT NUMBER

60587515

Designed By:	M. CURRAN
Drawn By:	M. CURRAN
Dept Check:	T. PARECE
Proj Check:	M. DONOGHUE
Date:	JANUARY 2020
Scale:	AS NOTED

DISCIPLINE

CIVIL

SHEET TITLE

PLAN AND PROFILE SEWER LOCUST ROAD I

SHEET NUMBER

03 C-102

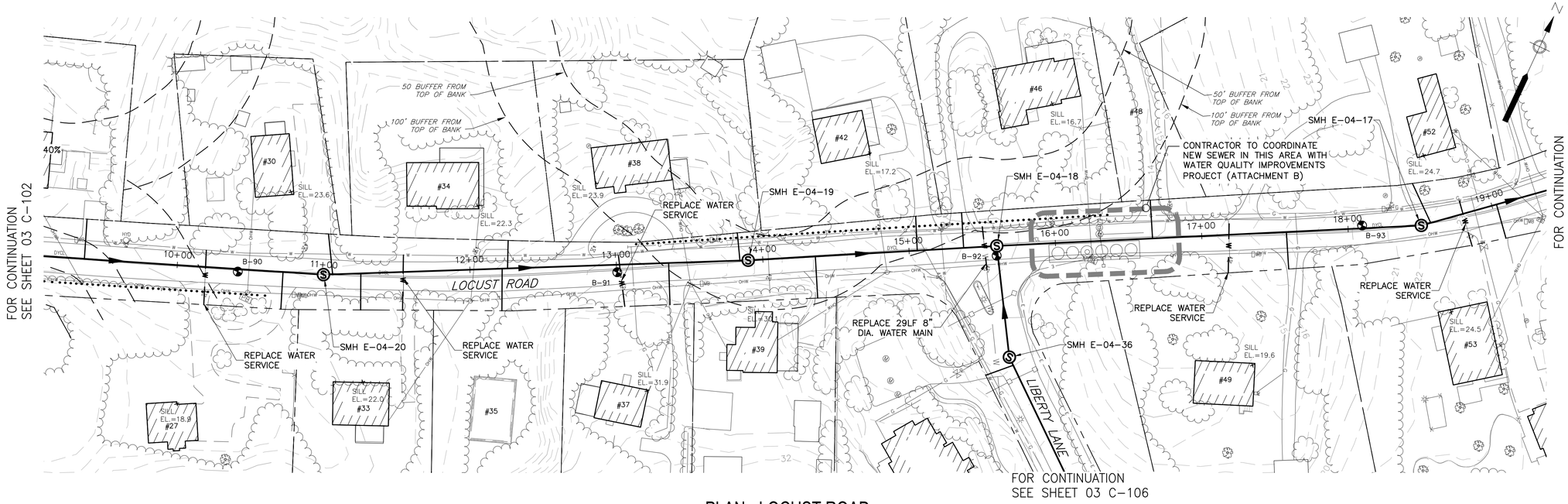

PLAN - LOCUST ROAD

SCALE: 1"=40'

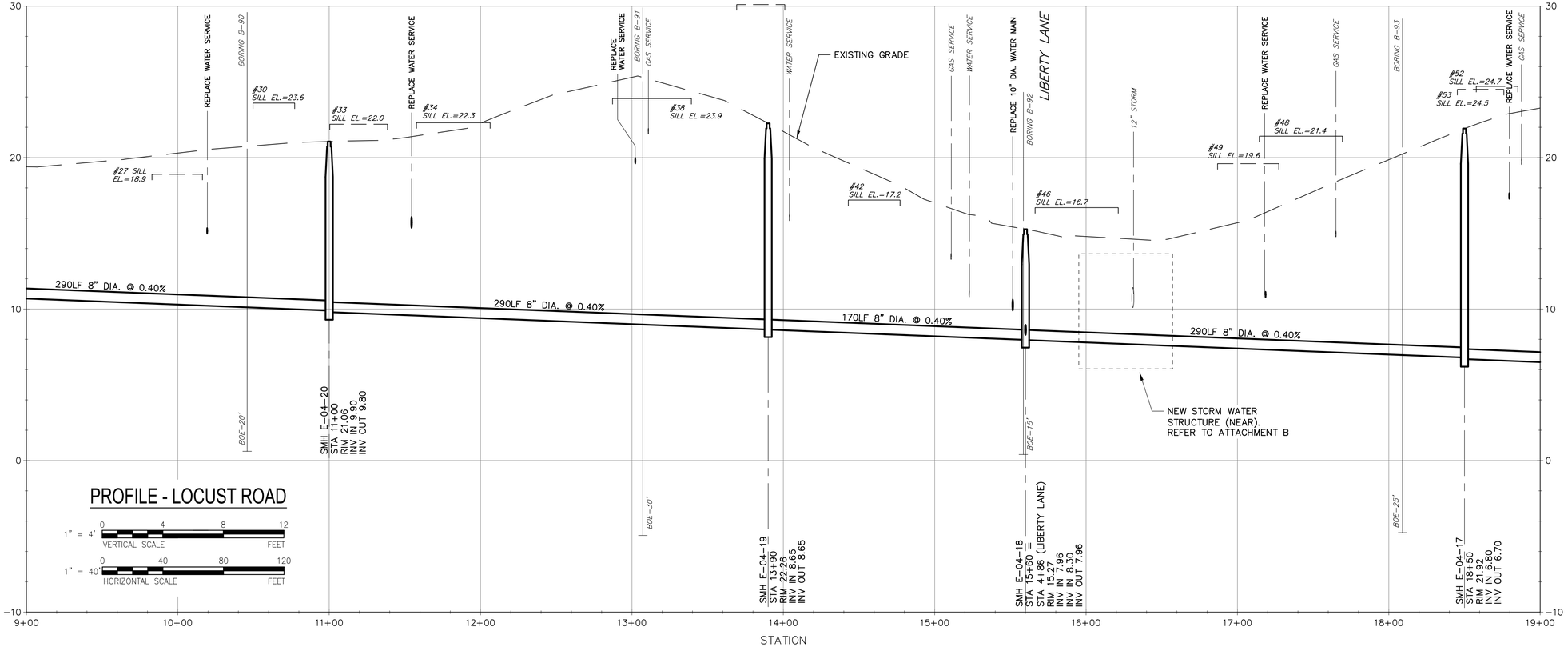

PROFILE - LOCUST ROAD

1" = 4' VERTICAL SCALE (0, 4, 8, 12 FEET)

1" = 40' HORIZONTAL SCALE (0, 40, 80, 120 FEET)

AECOM

PROJECT

DOWNTOWN AREA COLLECTION SYSTEM AND PUMP STATIONS

CONTRACT No. 2019-02
SRF No. 4486

OWNER

TOWN OF ORLEANS, MA
19 SCHOOL ROAD
ORLEANS, MA 02653
(508) 240-3700

ENGINEER

AECOM TECHNICAL SERVICES, INC.
9 JONATHAN BOURNE DRIVE
POCASSET, MA 02559
PHONE: (508) 833-6950
www.aecom.com

REGISTRATION

COMMONWEALTH OF MASSACHUSETTS
THOMAS E. PARECE
CIVIL
No. 34483
REGISTERED PROFESSIONAL ENGINEER
1/10/2020

ISSUE/REVISION

I/R	DATE	DESCRIPTION

PROJECT NUMBER

60587515

Designed By:	M. CURRAN
Drawn By:	M. CURRAN
Dept Check:	T. PARECE
Proj Check:	M. DONOGHUE
Date:	JANUARY 2020
Scale:	AS NOTED

DISCIPLINE

CIVIL

SHEET TITLE

PLAN AND PROFILE SEWER LOCUST ROAD II

SHEET NUMBER

03 C-103

Last saved by: CURRANM(2020-02-04) Last Plotted: 2020-02-04
Filename: L:\WORK\60476644 - ORLEANS DOWNTOWN SEWER\C3D - DOWNTOWN_SOURCE DRAWINGS\PS-3 - DOWNTOWN.DWG

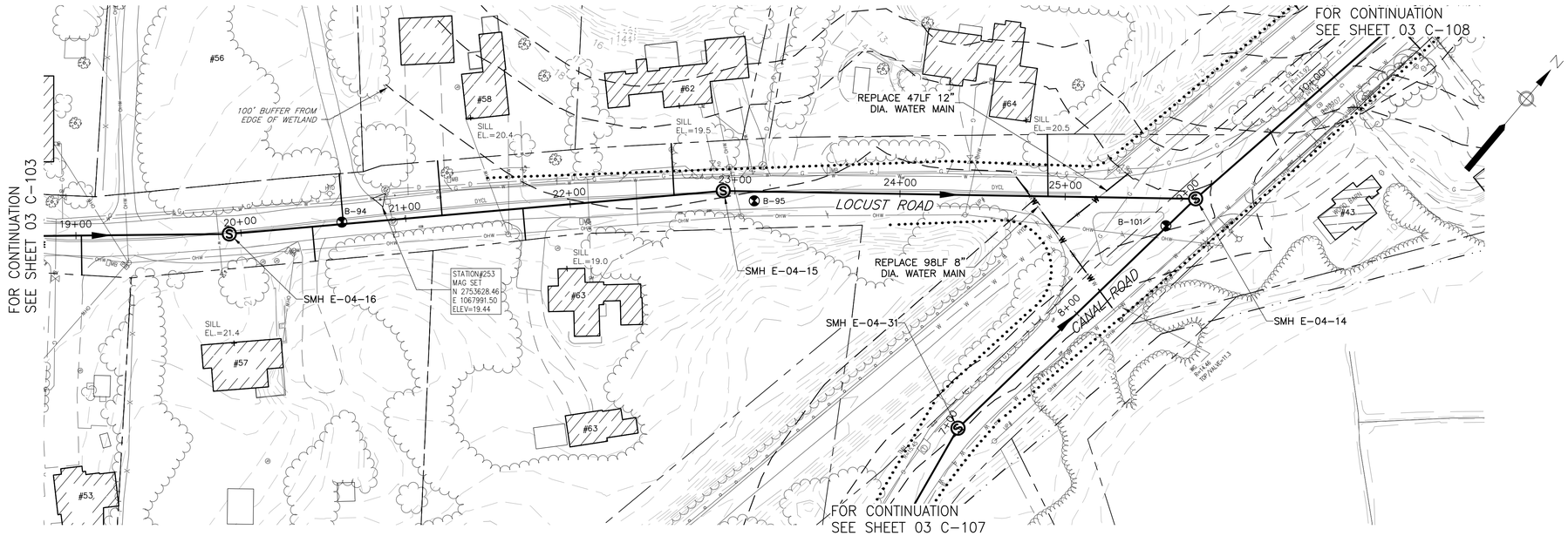

PLAN - LOCUST ROAD

SCALE: 1"=40'

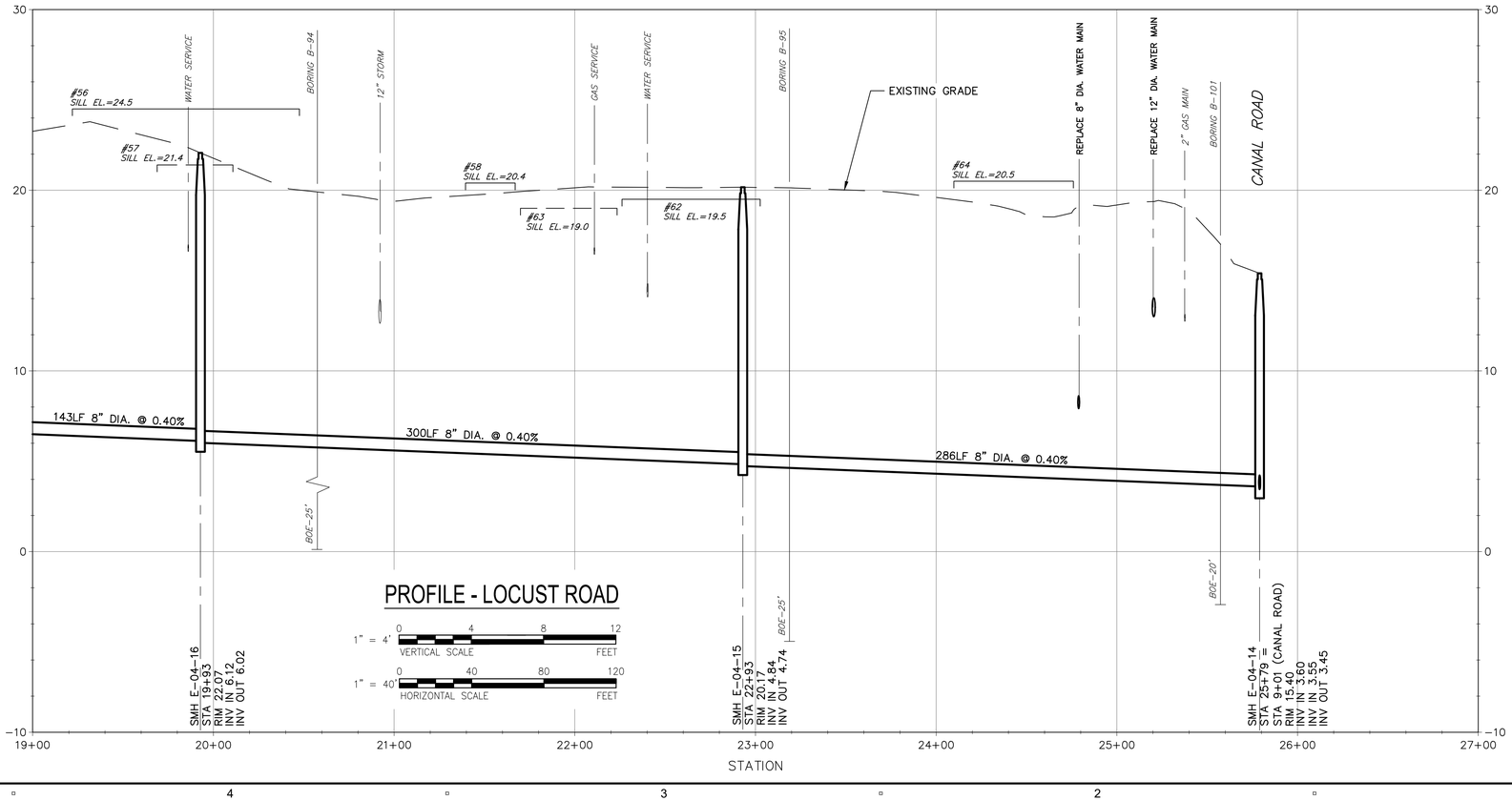

PROFILE - LOCUST ROAD

1" = 4' VERTICAL SCALE 0 4 8 12 FEET

1" = 40' HORIZONTAL SCALE 0 40 80 120 FEET

AECOM

PROJECT

DOWNTOWN AREA COLLECTION SYSTEM AND PUMP STATIONS

CONTRACT No. 2019-02
SRF No. 4486

OWNER

TOWN OF ORLEANS, MA

19 SCHOOL ROAD
ORLEANS, MA 02653
(508) 240-3700

ENGINEER

AECOM TECHNICAL SERVICES, INC.
9 JONATHAN BOURNE DRIVE
POCASSET, MA 02559
PHONE: (508) 833-6950
www.aecom.com

REGISTRATION

COMMONWEALTH OF MASSACHUSETTS
THOMAS E. PARECE
CIVIL
No. 34463
REGISTERED PROFESSIONAL ENGINEER

ISSUE/REVISION

I/R	DATE	DESCRIPTION

PROJECT NUMBER

60587515

Designed By:	M. CURRAN
Drawn By:	M. CURRAN
Dept Check:	T. PARECE
Proj Check:	M. DONOGHUE
Date:	JANUARY 2020
Scale:	AS NOTED

DISCIPLINE

CIVIL

SHEET TITLE

PLAN AND PROFILE SEWER LOCUST ROAD III

SHEET NUMBER

03 C-104

Last saved by: CURRANM (2020-02-04) Last Plotted: 2020-02-04
Filename: L:\WORK\60478644 - ORLEANS DOWNTOWN SEWER\C3D - DOWNTOWN_SOURCE DRAWINGS\PS-3 - DOWNTOWN.DWG

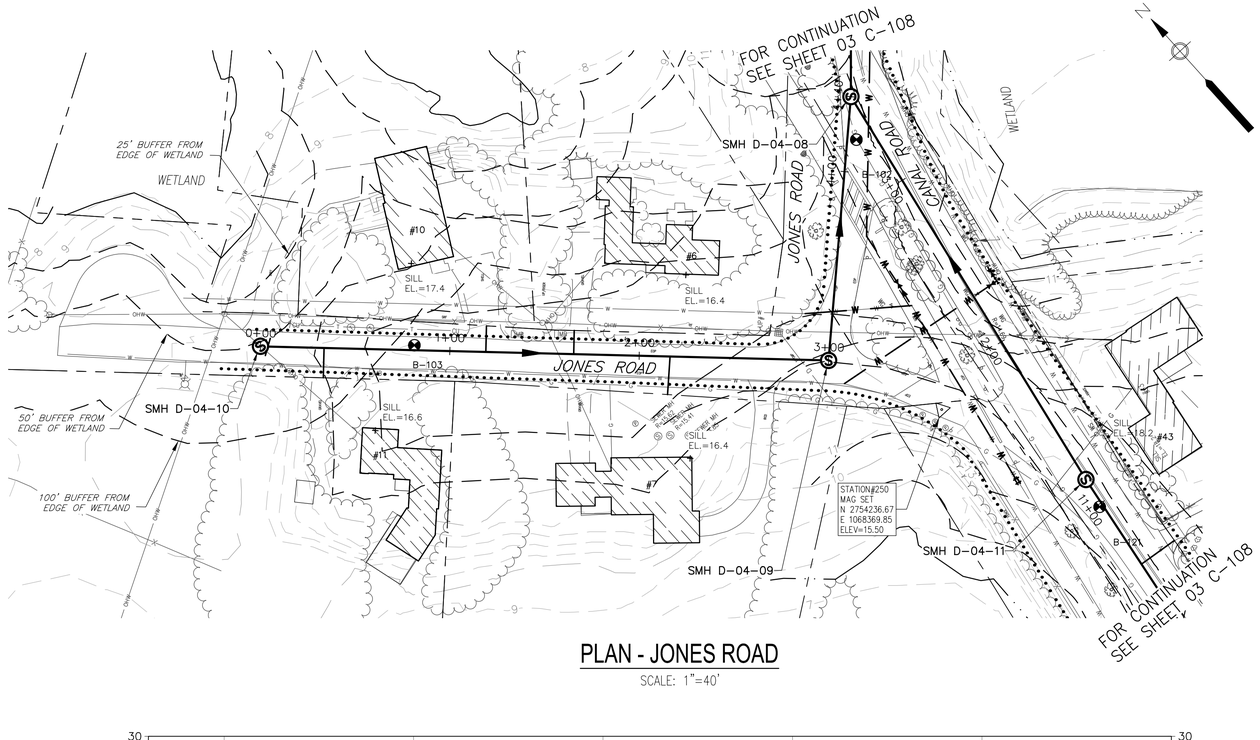

PLAN - JONES ROAD

SCALE: 1"=40'

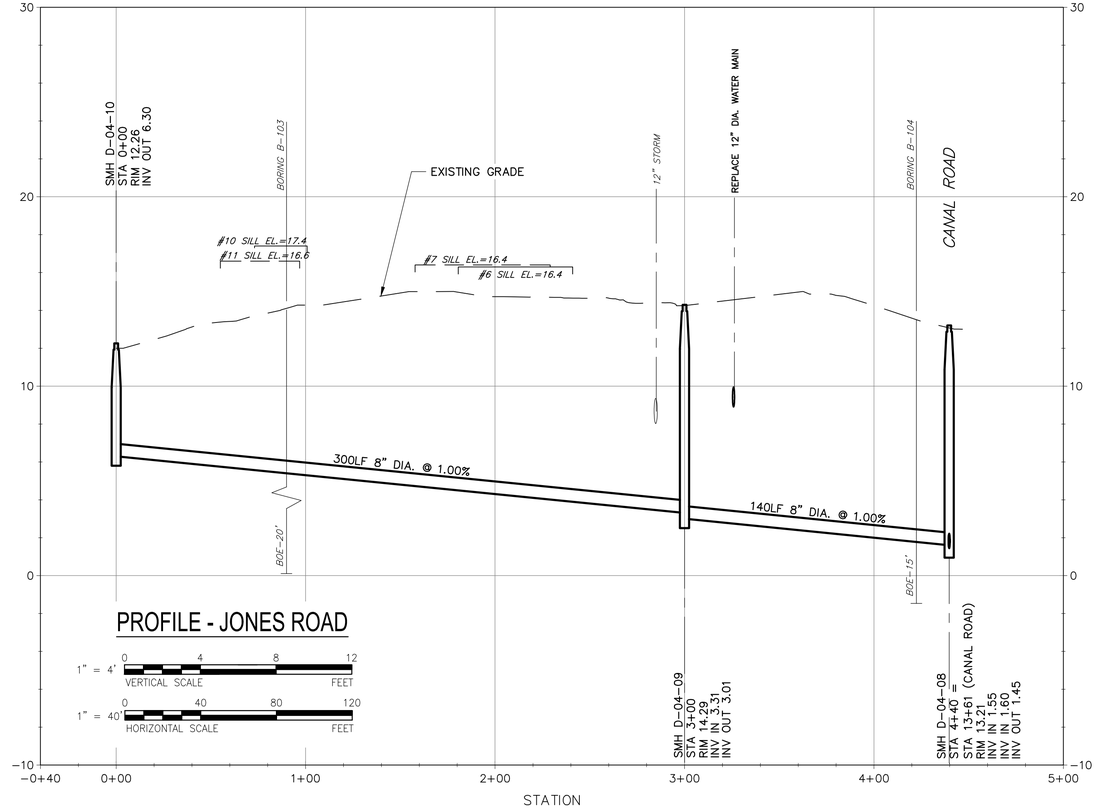

PROFILE - JONES ROAD

1" = 4' VERTICAL SCALE: 0, 4, 8, 12 FEET

1" = 40' HORIZONTAL SCALE: 0, 40, 80, 120 FEET

AECOM

PROJECT

DOWNTOWN AREA COLLECTION SYSTEM AND PUMP STATIONS

CONTRACT No. 2019-02
SRF No. 4486

OWNER

TOWN OF ORLEANS, MA
19 SCHOOL ROAD
ORLEANS, MA 02653
(508) 240-3700

ENGINEER

AECOM TECHNICAL SERVICES, INC.
9 JONATHAN BOURNE DRIVE
POCASSET, MA 02559
PHONE: (508) 833-6950
www.aecom.com

REGISTRATION

COMMONWEALTH OF MASSACHUSETTS
THOMAS E. PARECE
CIVIL
No. 34483
REGISTERED PROFESSIONAL ENGINEER
3/10/2020

ISSUE/REVISION

I/R	DATE	DESCRIPTION

PROJECT NUMBER

60587515

Designed By:	M. CURRAN
Drawn By:	M. CURRAN
Dept Check:	T. PARECE
Proj Check:	M. DONOGHUE
Date:	JANUARY 2020
Scale:	AS NOTED

DISCIPLINE

CIVIL

SHEET TITLE

PLAN AND PROFILE SEWER JONES ROAD

SHEET NUMBER

03 C-105

Last saved by: CURRANM(2020-02-04) Last Plotted: 2020-02-04
Filename: L:\WORK\60476644 - ORLEANS DOWNTOWN SEWER\C3D - DOWNTOWN_SOURCE DRAWINGS\PS-3 - DOWNTOWN.DWG

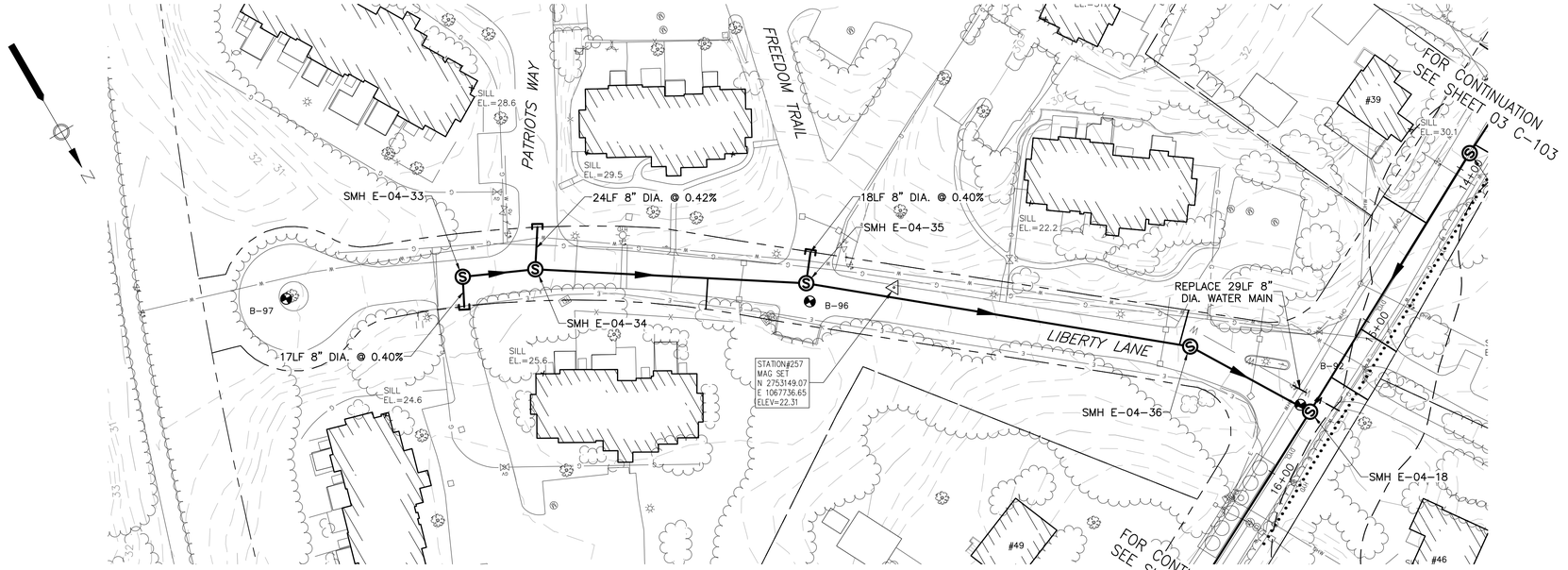

PLAN - LIBERTY LANE

SCALE: 1"=40'

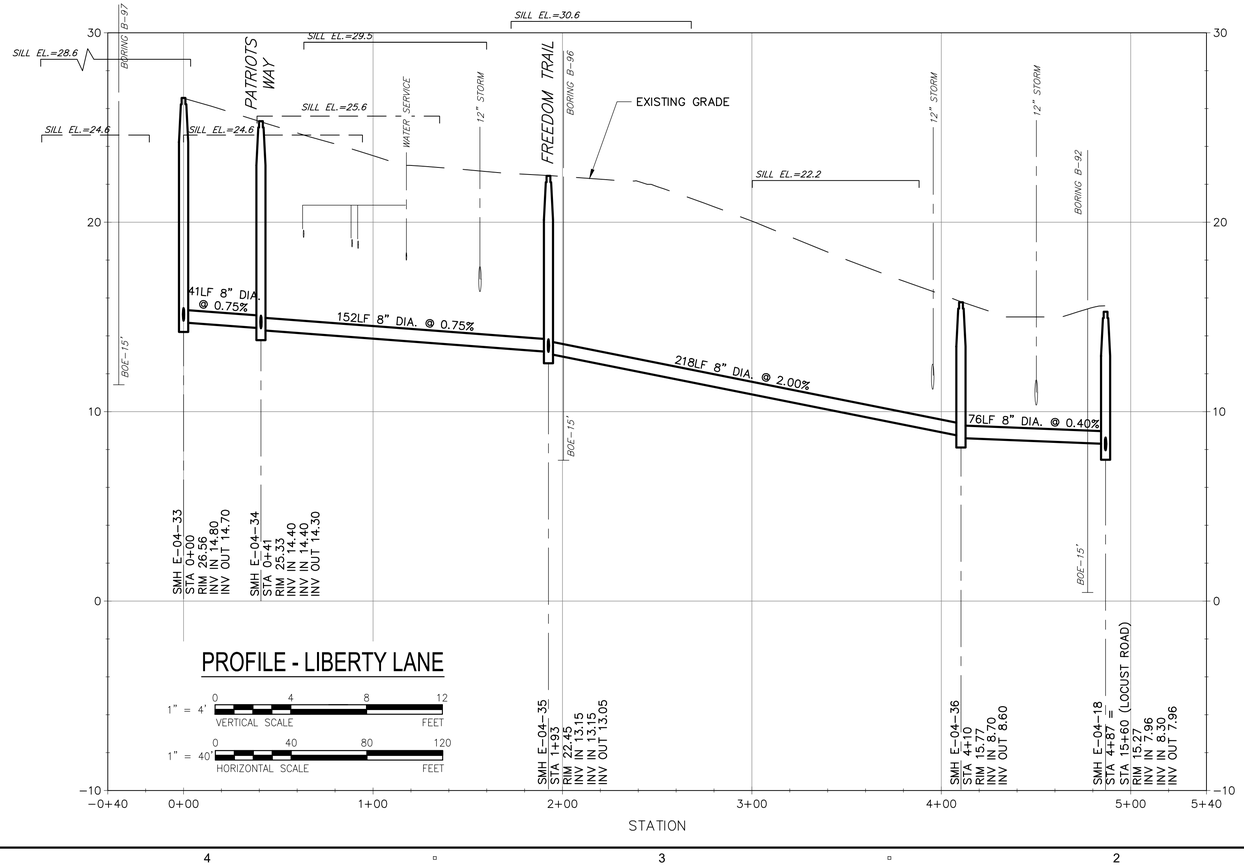

PROFILE - LIBERTY LANE

1" = 4' VERTICAL SCALE 0 4 8 12 FEET

1" = 40' HORIZONTAL SCALE 0 40 80 120 FEET

AECOM

PROJECT

DOWNTOWN AREA COLLECTION SYSTEM AND PUMP STATIONS

CONTRACT No. 2019-02
SRF No. 4486

OWNER

TOWN OF ORLEANS, MA
19 SCHOOL ROAD
ORLEANS, MA 02653
(508) 240-3700

ENGINEER

AECOM TECHNICAL SERVICES, INC.
9 JONATHAN BOURNE DRIVE
POCASSET, MA 02559
PHONE: (508) 833-6950
www.aecom.com

REGISTRATION

COMMONWEALTH OF MASSACHUSETTS
THOMAS E. PARECE
CIVIL
No. 34663
REGISTERED PROFESSIONAL ENGINEER

ISSUE/REVISION

I/R	DATE	DESCRIPTION

PROJECT NUMBER

60587515

Designed By:	M. CURRAN
Drawn By:	M. CURRAN
Dept Check:	T. PARECE
Proj Check:	M. DONOGHUE
Date:	JANUARY 2020
Scale:	AS NOTED

DISCIPLINE

CIVIL

SHEET TITLE

PLAN AND PROFILE SEWER LIBERTY LANE

SHEET NUMBER

03 C-106

Last saved by: CURRANM(2020-02-04) Last Plotted: 2020-02-04
Filename: L:\WORK\60047644 - ORLEANS DOWNTOWN SEWER\C3D - DOWNTOWN_SOURCE DRAWINGS\PS-3 - DOWNTOWN.DWG

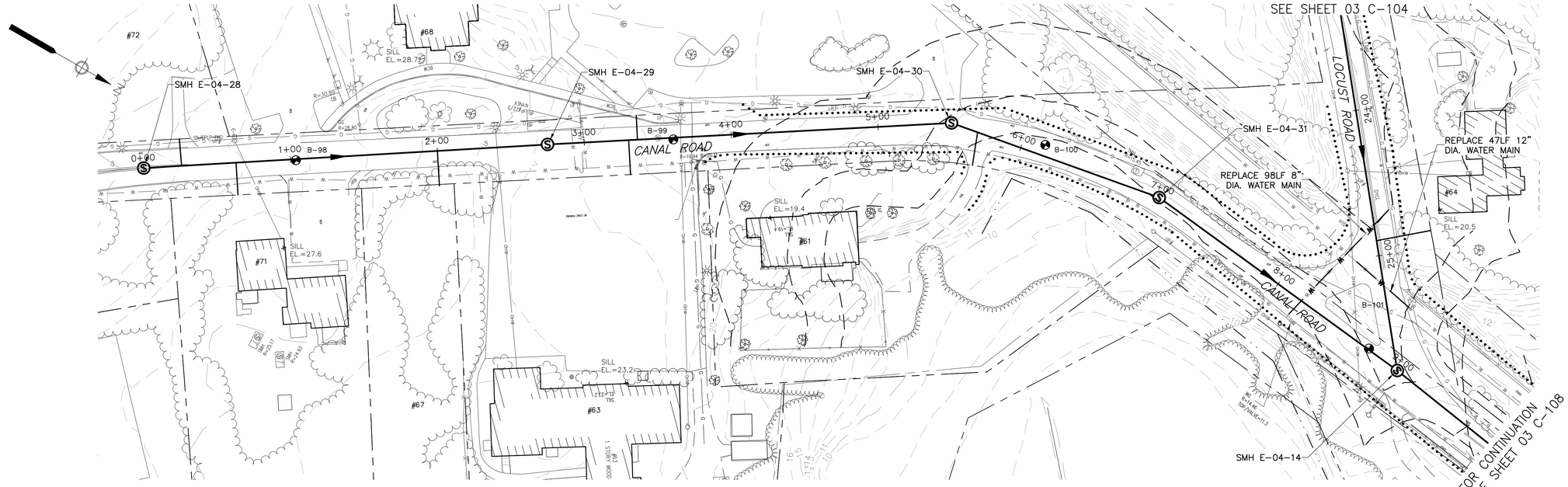

PLAN - CANAL ROAD

SCALE: 1"=40'

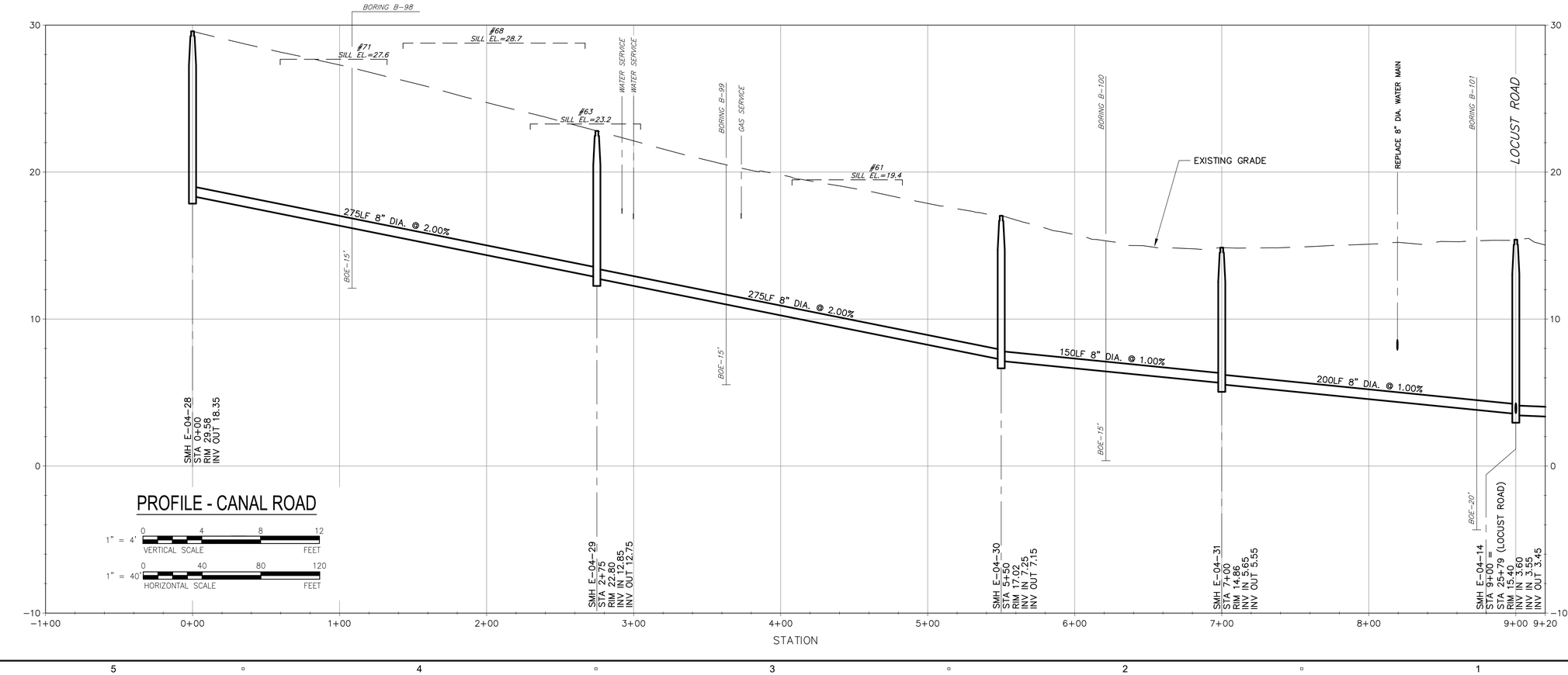

PROFILE - CANAL ROAD

1" = 4' VERTICAL SCALE 0 4 8 12 FEET

1" = 40' HORIZONTAL SCALE 0 40 80 120 FEET

AECOM

PROJECT

DOWNTOWN AREA COLLECTION SYSTEM AND PUMP STATIONS

CONTRACT No. 2019-02
SRF No. 4486

OWNER

TOWN OF ORLEANS, MA
19 SCHOOL ROAD
ORLEANS, MA 02653
(508) 240-3700

ENGINEER

AECOM TECHNICAL SERVICES, INC.
9 JONATHAN BOURNE DRIVE
POCASSET, MA 02559
PHONE: (508) 833-6950
www.aecom.com

REGISTRATION

COMMONWEALTH OF MASSACHUSETTS
THOMAS E. PARECE
CIVIL
No. 34463
REGISTERED PROFESSIONAL ENGINEER

ISSUE/REVISION

I/R	DATE	DESCRIPTION

PROJECT NUMBER

60587515

Designed By:	M. CURRAN
Drawn By:	M. CURRAN
Dept Check:	T. PARECE
Proj Check:	M. DONOGHUE
Date:	JANUARY 2020
Scale:	AS NOTED

DISCIPLINE

CIVIL

SHEET TITLE

PLAN AND PROFILE SEWER CANAL ROAD I

SHEET NUMBER

03 C-107

Last saved by: CURRANM (2020-02-04) Last Plotted: 2020-02-04
Filename: L:\WORK\60476644 - ORLEANS DOWNTOWN SEWER\C3D - DOWNTOWN_SOURCE DRAWINGS\PS-3 - DOWNTOWN.DWG

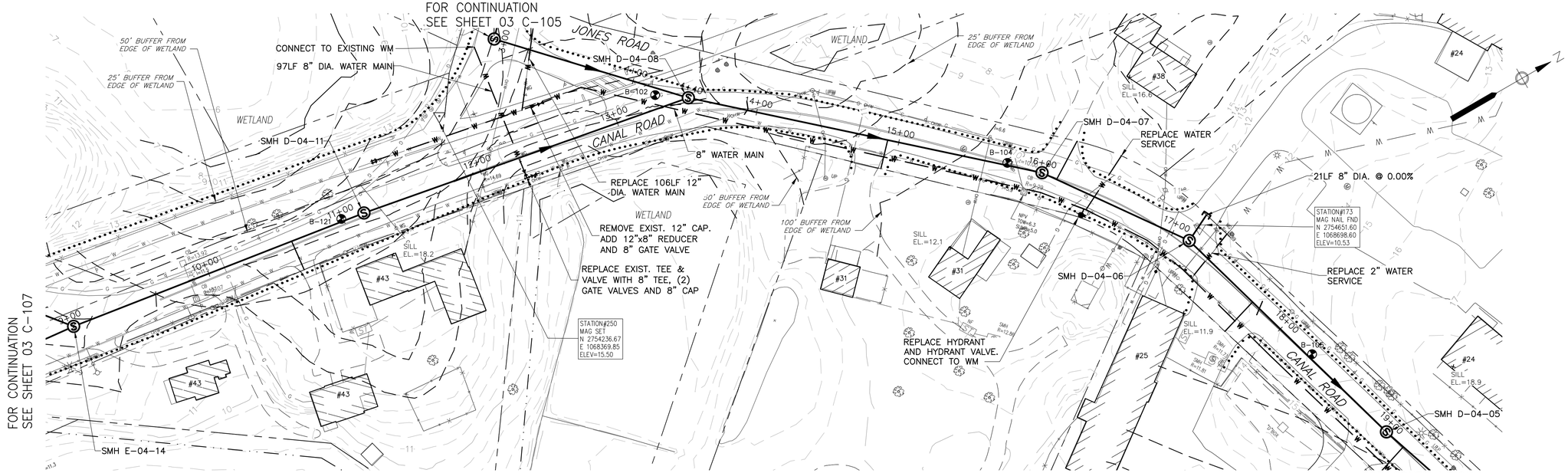

PLAN - CANAL ROAD

SCALE: 1"=40'

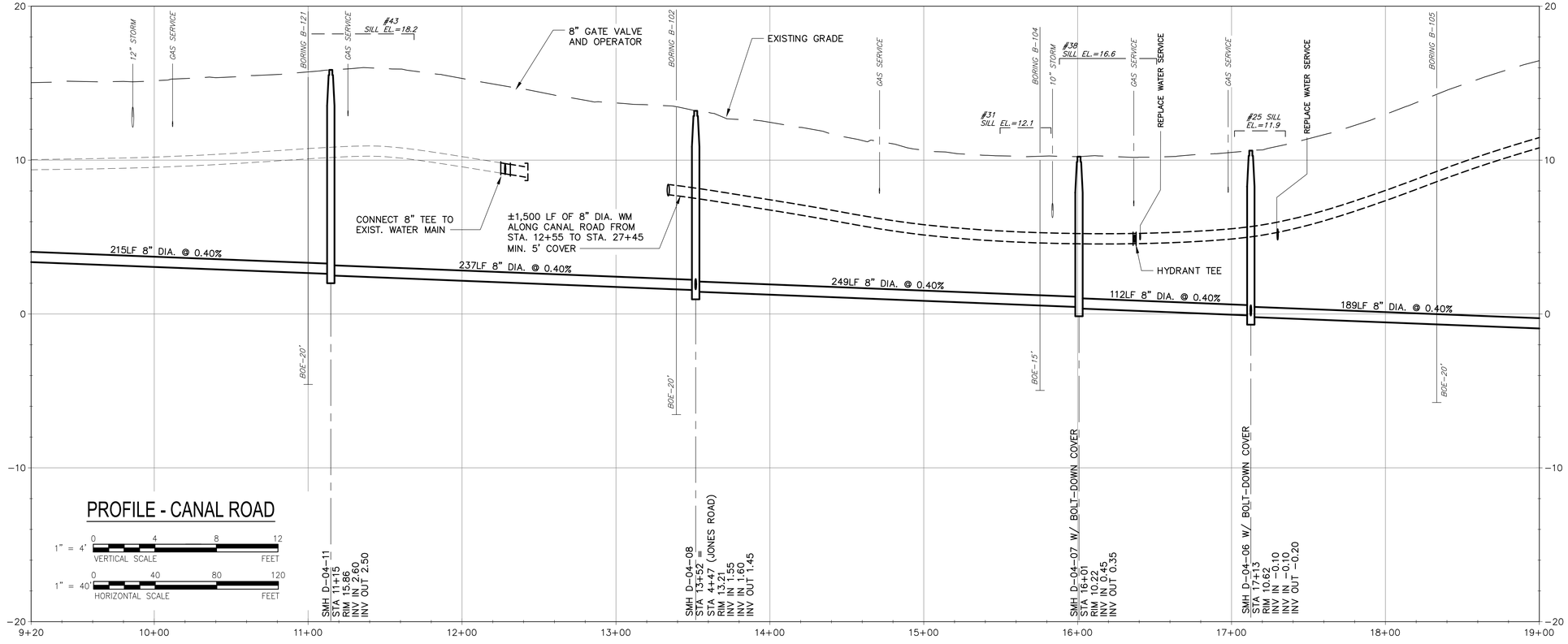

PROFILE - CANAL ROAD

1" = 4' VERTICAL SCALE (0, 4, 8, 12 FEET)

1" = 40' HORIZONTAL SCALE (0, 40, 80, 120 FEET)

Last saved by: CURRANM(2020-02-04) Last Plotted: 2020-02-04
Filename: L:\WORK\60475644 - ORLEANS DOWNTOWN SEWER\C3D - DOWNTOWN_SOURCE DRAWINGS\PS-3 - DOWNTOWN.DWG

AECOM

PROJECT

DOWNTOWN AREA COLLECTION SYSTEM AND PUMP STATIONS

CONTRACT No. 2019-02
SRF No. 4486

OWNER

TOWN OF ORLEANS, MA
19 SCHOOL ROAD
ORLEANS, MA 02653
(508) 240-3700

ENGINEER

AECOM TECHNICAL SERVICES, INC.
9 JONATHAN BOURNE DRIVE
POCASSET, MA 02559
PHONE: (508) 833-6950
www.aecom.com

REGISTRATION

COMMONWEALTH OF MASSACHUSETTS
THOMAS E. PARECE
CIVIL
No. 34483
REGISTERED PROFESSIONAL ENGINEER

ISSUE/REVISION

I/R	DATE	DESCRIPTION

PROJECT NUMBER

60587515

Designed By:	M. CURRAN
Drawn By:	M. CURRAN
Dept Check:	T. PARECE
Proj Check:	M. DONOGHUE
Date:	JANUARY 2020
Scale:	AS NOTED

DISCIPLINE

CIVIL

SHEET TITLE

PLAN AND PROFILE SEWER CANAL ROAD II

SHEET NUMBER

03 C-108

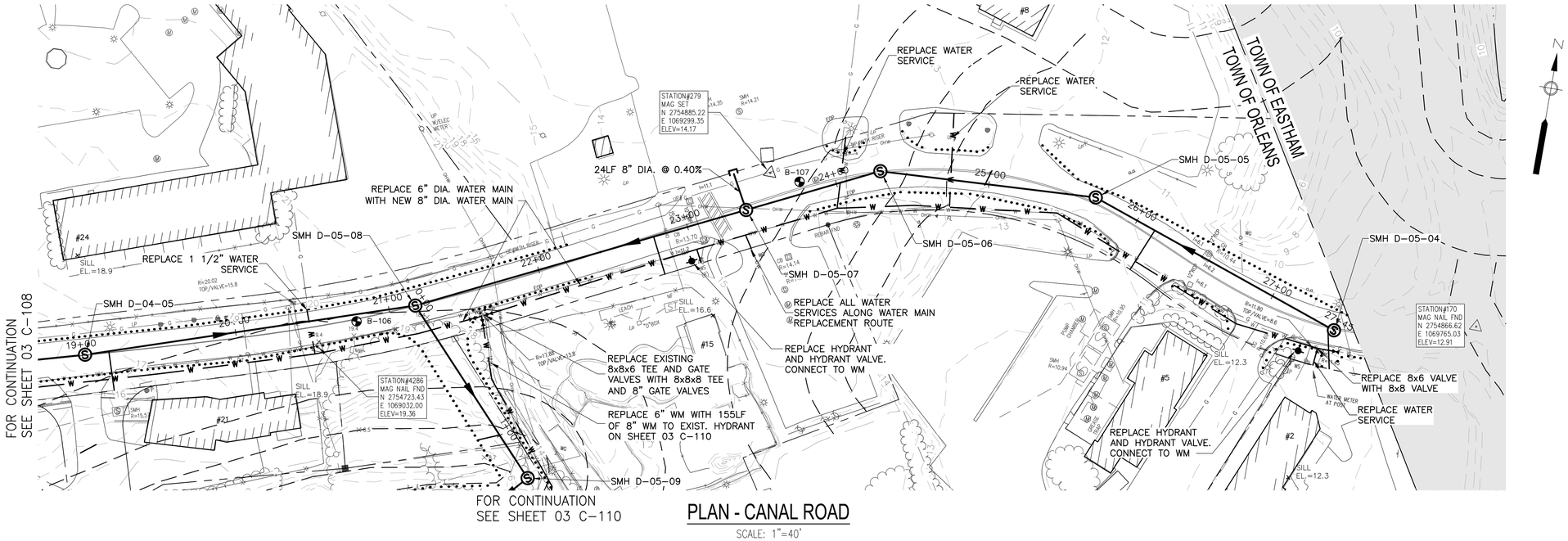

PLAN - CANAL ROAD

SCALE: 1"=40'

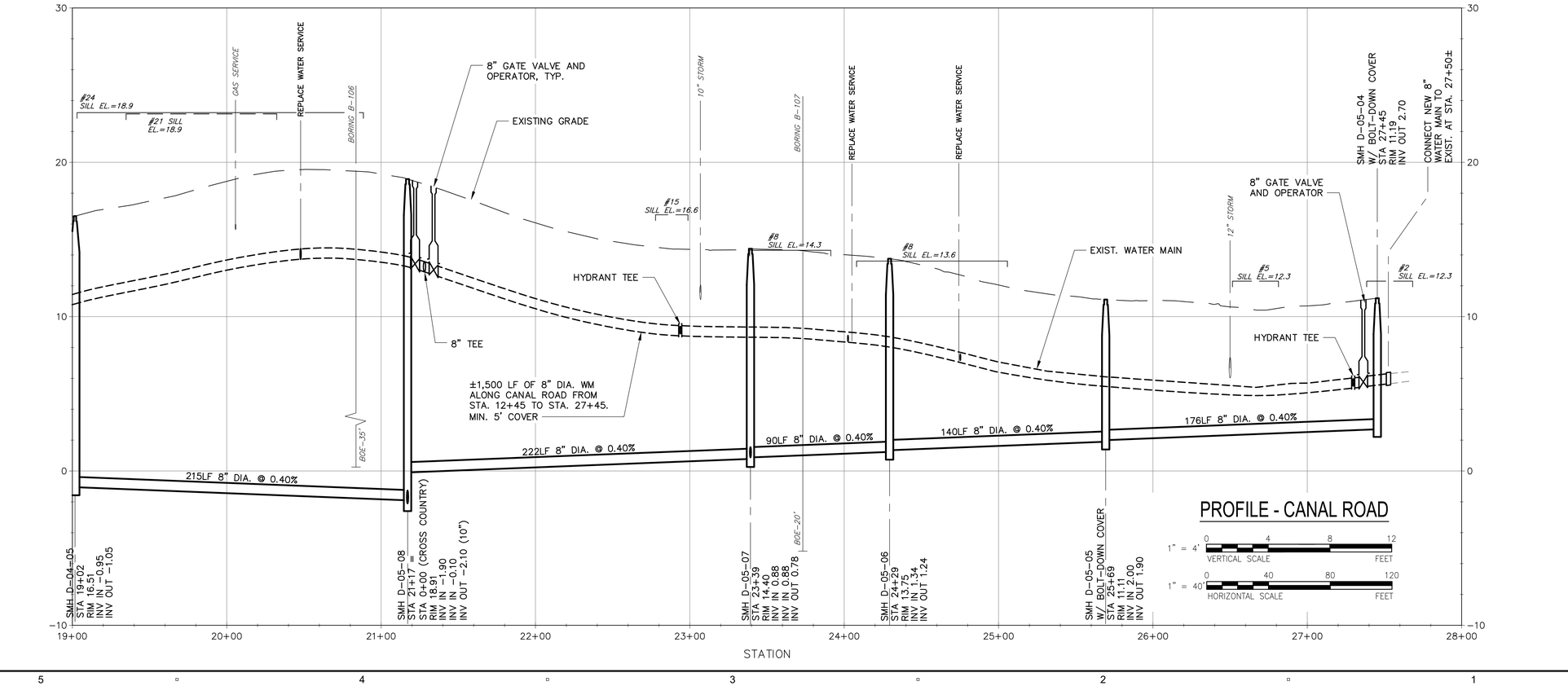

PROFILE - CANAL ROAD

1" = 4' VERTICAL SCALE (0, 4, 8, 12 FEET)

1" = 40' HORIZONTAL SCALE (0, 40, 80, 120 FEET)

AECOM

PROJECT

DOWNTOWN AREA COLLECTION SYSTEM AND PUMP STATIONS

CONTRACT No. 2019-02
SRF No. 4486

OWNER

TOWN OF ORLEANS, MA
19 SCHOOL ROAD
ORLEANS, MA 02653
(508) 240-3700

ENGINEER

AECOM TECHNICAL SERVICES, INC.
9 JONATHAN BOURNE DRIVE
POCASSET, MA 02559
PHONE: (508) 833-6950
www.aecom.com

REGISTRATION

COMMONWEALTH OF MASSACHUSETTS
THOMAS E. PARECE
CIVIL
No. 34483
REGISTERED PROFESSIONAL ENGINEER

ISSUE/REVISION

I/R	DATE	DESCRIPTION

PROJECT NUMBER

60587515

Designed By:	M. CURRAN
Drawn By:	M. CURRAN
Dept Check:	T. PARECE
Proj Check:	M. DONOGHUE
Date:	JANUARY 2020
Scale:	AS NOTED

DISCIPLINE

CIVIL

SHEET TITLE

PLAN AND PROFILE SEWER CANAL ROAD III

SHEET NUMBER

03 C-109

Last saved by: CURRANM(2020-02-04) Last Plotted: 2020-02-04
Filename: L:\WORK\60\47\6644 - ORLEANS DOWNTOWN SEWER\C3D - DOWNTOWN_SOURCE DRAWINGS\PS-3 - DOWNTOWN.DWG

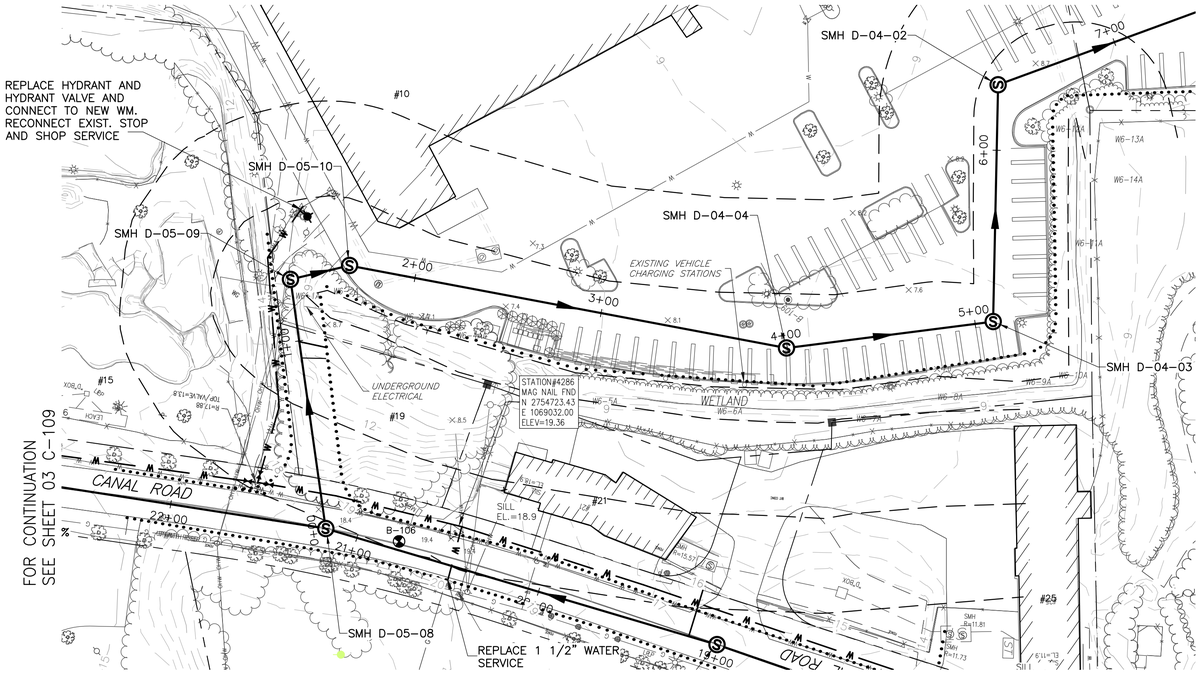

PLAN - CROSS COUNTRY

SCALE: 1"=40'

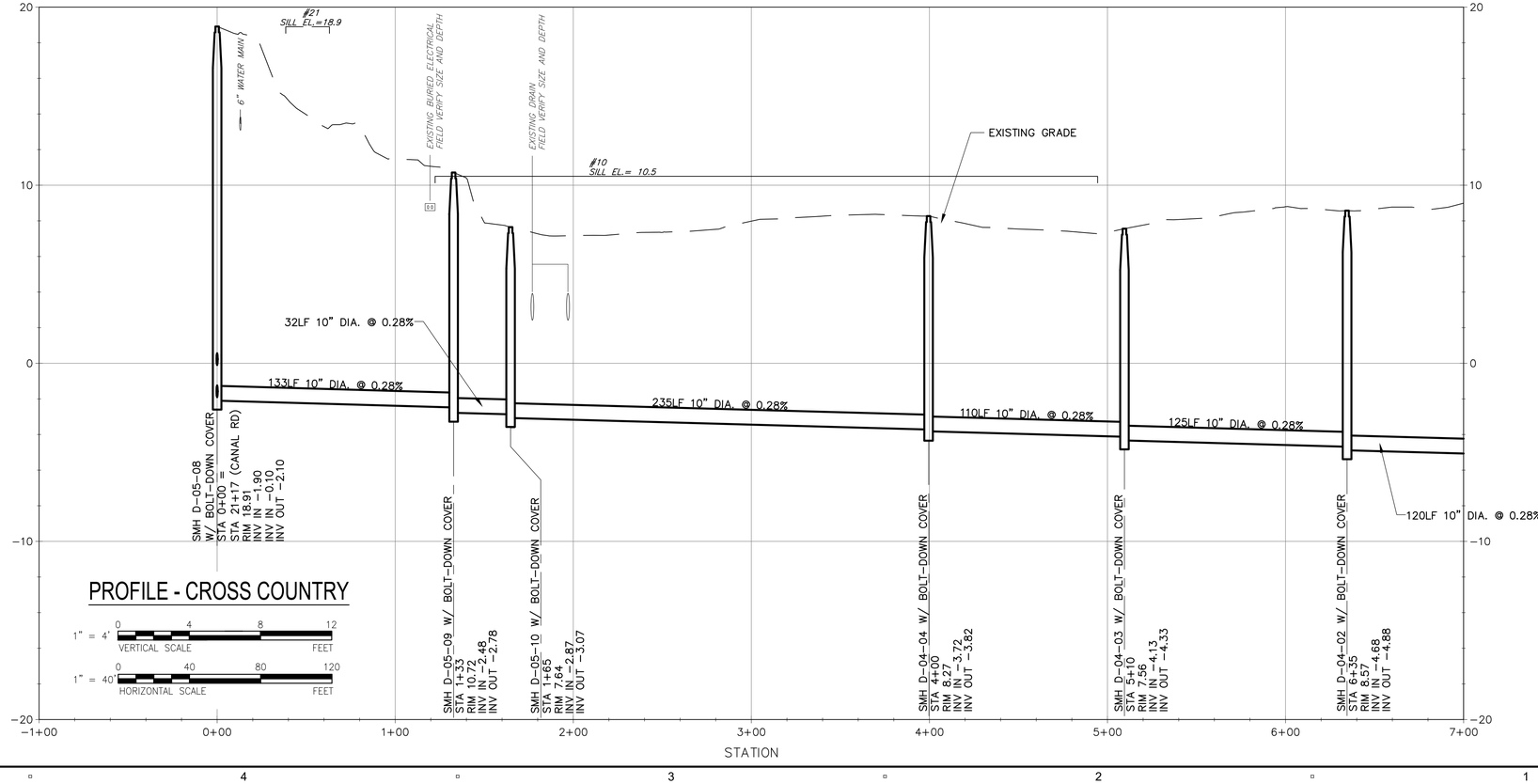

PROFILE - CROSS COUNTRY

1" = 4' VERTICAL SCALE (0, 4, 8, 12 FEET)

1" = 40' HORIZONTAL SCALE (0, 40, 80, 120 FEET)

AECOM

PROJECT

DOWNTOWN AREA COLLECTION SYSTEM AND PUMP STATIONS

CONTRACT No. 2019-02
SRF No. 4486

OWNER

TOWN OF ORLEANS, MA
19 SCHOOL ROAD
ORLEANS, MA 02653
(508) 240-3700

ENGINEER

AECOM TECHNICAL SERVICES, INC.
9 JONATHAN BOURNE DRIVE
POCASSET, MA 02559
PHONE: (508) 833-6950
www.aecom.com

REGISTRATION

COMMONWEALTH OF MASSACHUSETTS
THOMAS E. PARECE
CIVIL
No. 34463
REGISTERED PROFESSIONAL ENGINEER
12/18/2020

ISSUE/REVISION

I/R	DATE	DESCRIPTION

PROJECT NUMBER

60587515

Designed By:	M. CURRAN
Drawn By:	M. CURRAN
Dept Check:	T. PARECE
Proj Check:	M. DONOGHUE
Date:	JANUARY 2020
Scale:	AS NOTED

DISCIPLINE

CIVIL

SHEET TITLE

PLAN AND PROFILE SEWER CROSS COUNTRY I

SHEET NUMBER

03 C-110

Last saved by: CURRANM(2020-02-04) Last Plotted: 2020-02-04
Filename: L:\WORK\60\47\6644 - ORLEANS DOWNTOWN SEWER\C3D - DOWNTOWN_SOURCE DRAWINGS\PS-3 - DOWNTOWN.DWG

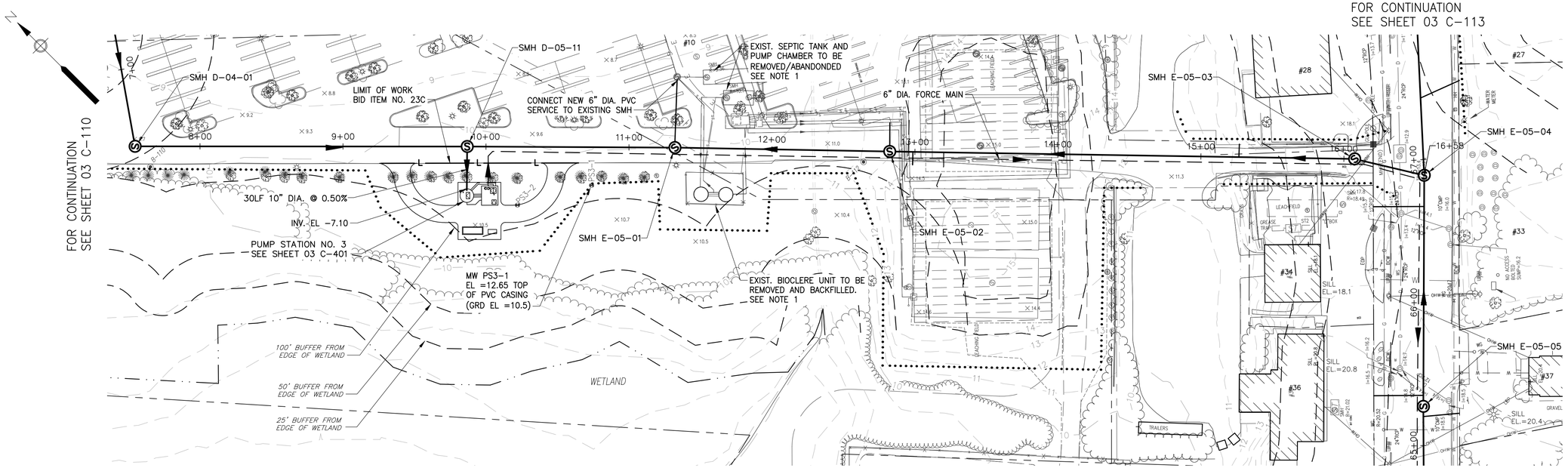

NOTE:
1. REFER TO SPECIFICATION SECTION 01030 – SPECIAL REQUIREMENTS

PLAN - CROSS COUNTRY

SCALE: 1"=40'

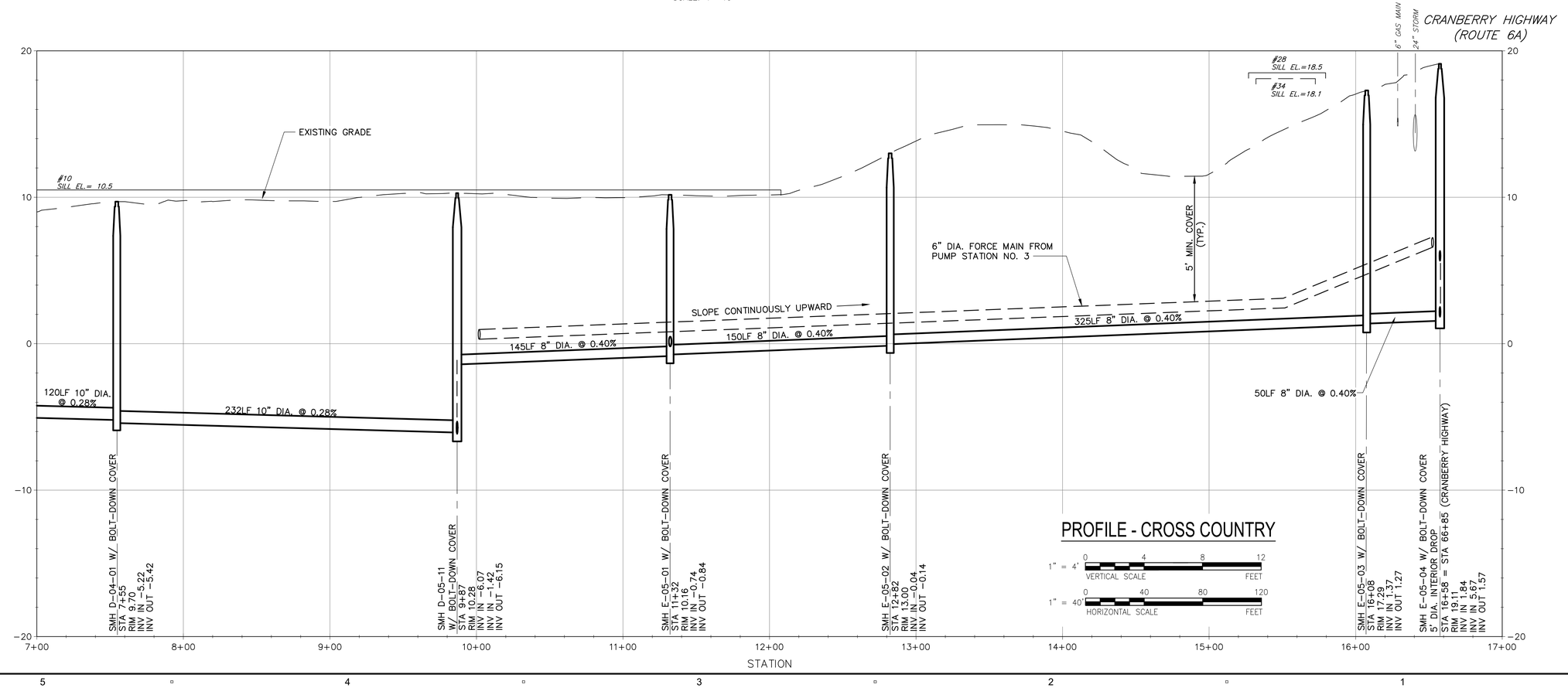

PROFILE - CROSS COUNTRY

1" = 4' VERTICAL SCALE (0, 4, 8, 12 FEET)

1" = 40' HORIZONTAL SCALE (0, 40, 80, 120 FEET)

AECOM

PROJECT

DOWNTOWN AREA COLLECTION SYSTEM AND PUMP STATIONS

CONTRACT No. 2019-02
SRF No. 4486

OWNER

TOWN OF ORLEANS, MA
19 SCHOOL ROAD
ORLEANS, MA 02653
(508) 240-3700

ENGINEER

AECOM TECHNICAL SERVICES, INC.
9 JONATHAN BOURNE DRIVE
POCASSET, MA 02559
PHONE: (508) 833-6950
www.aecom.com

REGISTRATION

COMMONWEALTH OF MASSACHUSETTS
THOMAS E. PARECE
CIVIL
No. 34463
REGISTERED PROFESSIONAL ENGINEER

ISSUE/REVISION

I/R	DATE	DESCRIPTION

PROJECT NUMBER

60587515

Designed By:	M. CURRAN
Drawn By:	M. CURRAN
Dept Check:	T. PARECE
Proj Check:	M. DONOGHUE
Date:	JANUARY 2020
Scale:	AS NOTED

DISCIPLINE

CIVIL

SHEET TITLE

PLAN AND PROFILE SEWER CROSS COUNTRY II

SHEET NUMBER

03 C-111

Last saved by: CURRANM (2020-02-04) Last Plotted: 2020-02-04
Filename: L:\WORK\60478644 - ORLEANS DOWNTOWN SEWER\C3D - DOWNTOWN_SOURCE DRAWINGS\PS-3 - DOWNTOWN.DWG

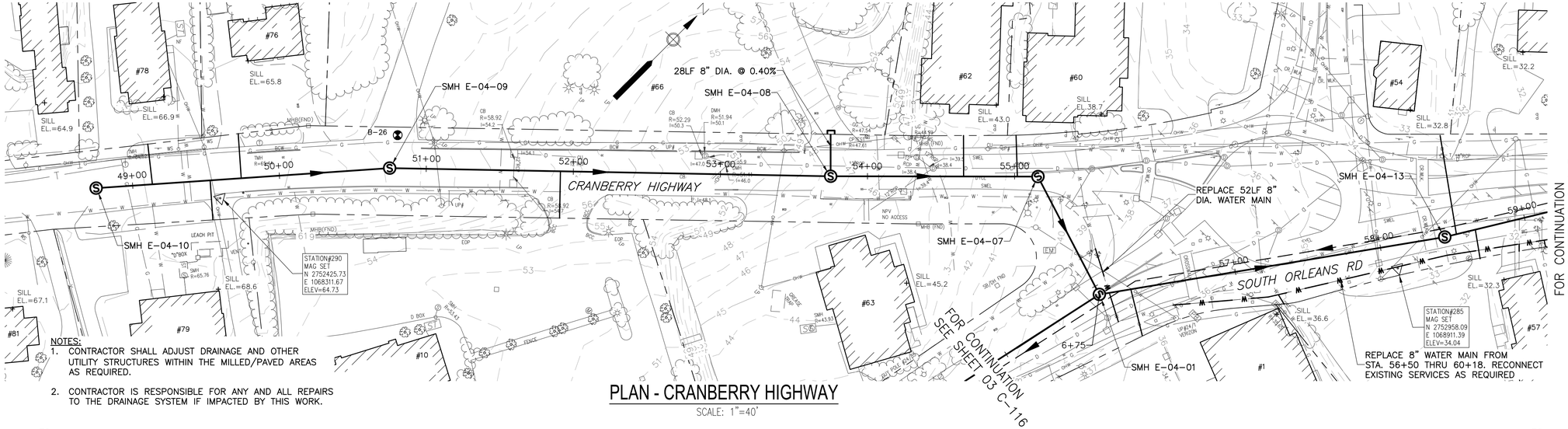

NOTES:
1. CONTRACTOR SHALL ADJUST DRAINAGE AND OTHER UTILITY STRUCTURES WITHIN THE MILLED/PAVED AREAS AS REQUIRED.
2. CONTRACTOR IS RESPONSIBLE FOR ANY AND ALL REPAIRS TO THE DRAINAGE SYSTEM IF IMPACTED BY THIS WORK.

PLAN - CRANBERRY HIGHWAY

SCALE: 1"=40'

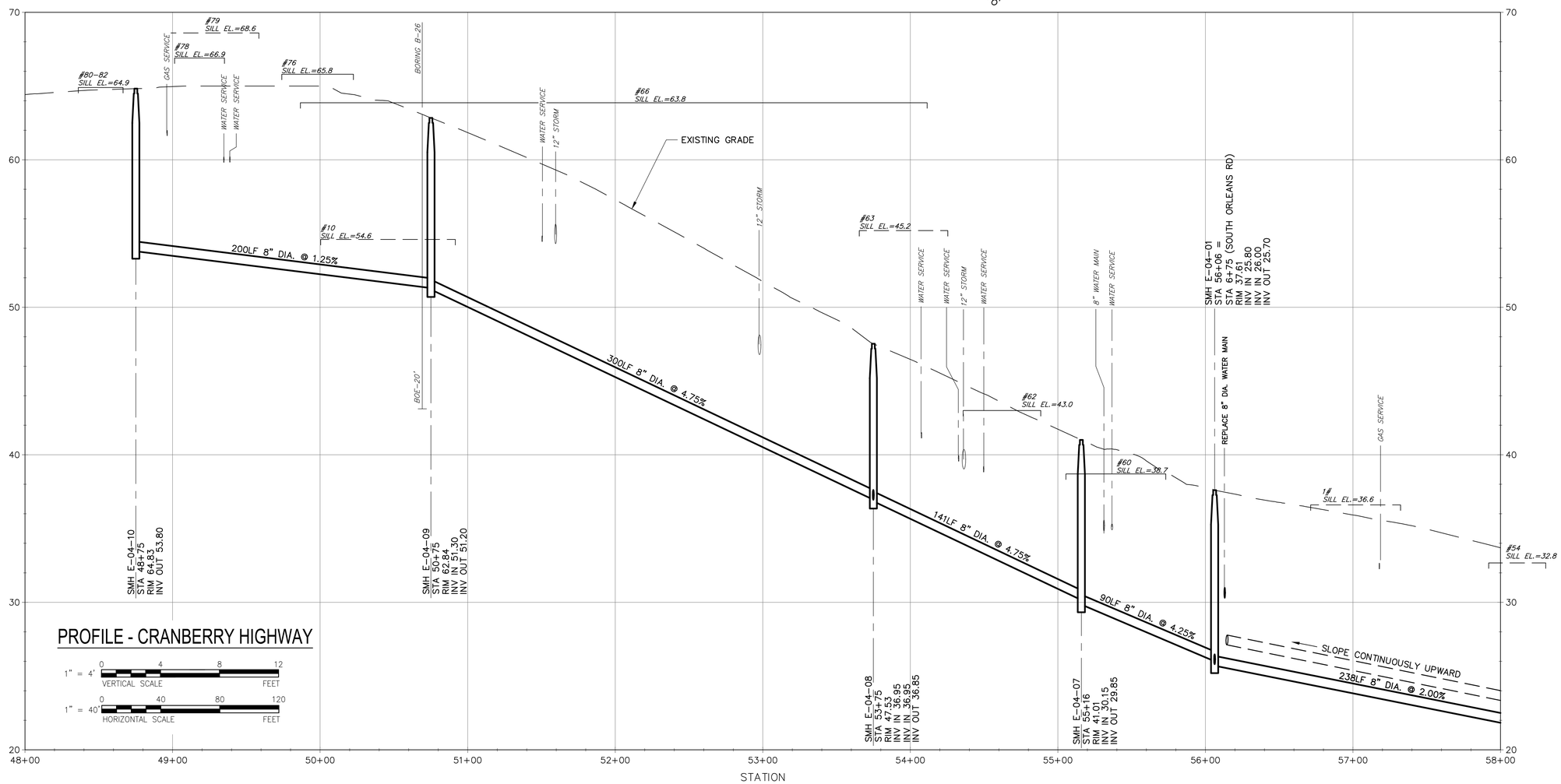

PROFILE - CRANBERRY HIGHWAY

1" = 4' VERTICAL SCALE (0, 4, 8, 12 FEET)

1" = 40' HORIZONTAL SCALE (0, 40, 80, 120 FEET)

AECOM

PROJECT

DOWNTOWN AREA COLLECTION SYSTEM AND PUMP STATIONS

CONTRACT No. 2019-02
SRF No. 4486

OWNER

TOWN OF ORLEANS, MA
19 SCHOOL ROAD
ORLEANS, MA 02653
(508) 240-3700

ENGINEER

AECOM TECHNICAL SERVICES, INC.
9 JONATHAN BOURNE DRIVE
POCASSET, MA 02559
PHONE: (508) 833-6950
www.aecom.com

REGISTRATION

COMMONWEALTH OF MASSACHUSETTS
THOMAS E. PARECE
CIVIL
No. 34483
REGISTERED PROFESSIONAL ENGINEER

ISSUE/REVISION

I/R	DATE	DESCRIPTION

PROJECT NUMBER

60587515

Designed By:	M. CURRAN
Drawn By:	M. CURRAN
Dept Check:	T. PARECE
Proj Check:	M. DONOGHUE
Date:	JANUARY 2020
Scale:	AS NOTED

DISCIPLINE

CIVIL

SHEET TITLE

PLAN AND PROFILE SEWER CRANBERRY HIGHWAY I

SHEET NUMBER

03 C-112

Last saved by: CURRANM (2020-02-04) Last Plotted: 2020-02-04
Filename: L:\WORK\60476644 - ORLEANS DOWNTOWN SEWER\C3D - DOWNTOWN_SOURCE DRAWINGS\PS-3 - DOWNTOWN.DWG

FOR CONTINUATION
SEE SHEET 03 C-111

FOR CONTINUATION
SEE SHEET 03 C-112

FOR CONTINUATION
SEE SHEET 03 C-114

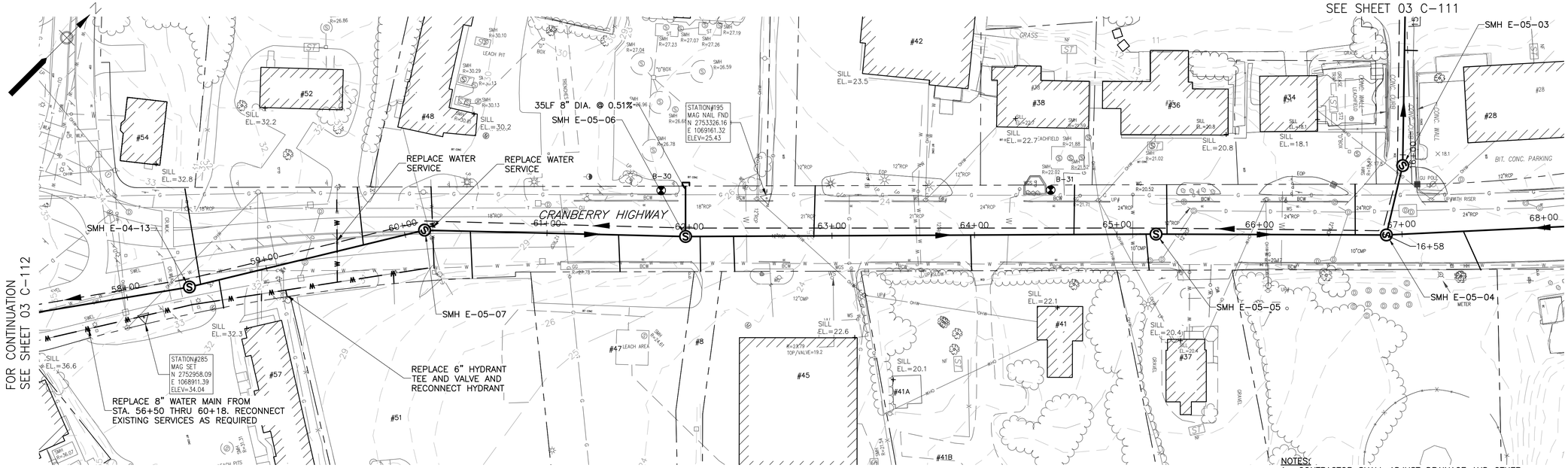

PLAN - CRANBERRY HIGHWAY

SCALE: 1"=40'

NOTES:
1. CONTRACTOR SHALL ADJUST DRAINAGE AND OTHER UTILITY STRUCTURES WITHIN THE MILLED/PAVED AREAS AS REQUIRED.
2. CONTRACTOR IS RESPONSIBLE FOR ANY AND ALL REPAIRS TO THE DRAINAGE SYSTEM IF IMPACTED BY THIS WORK.

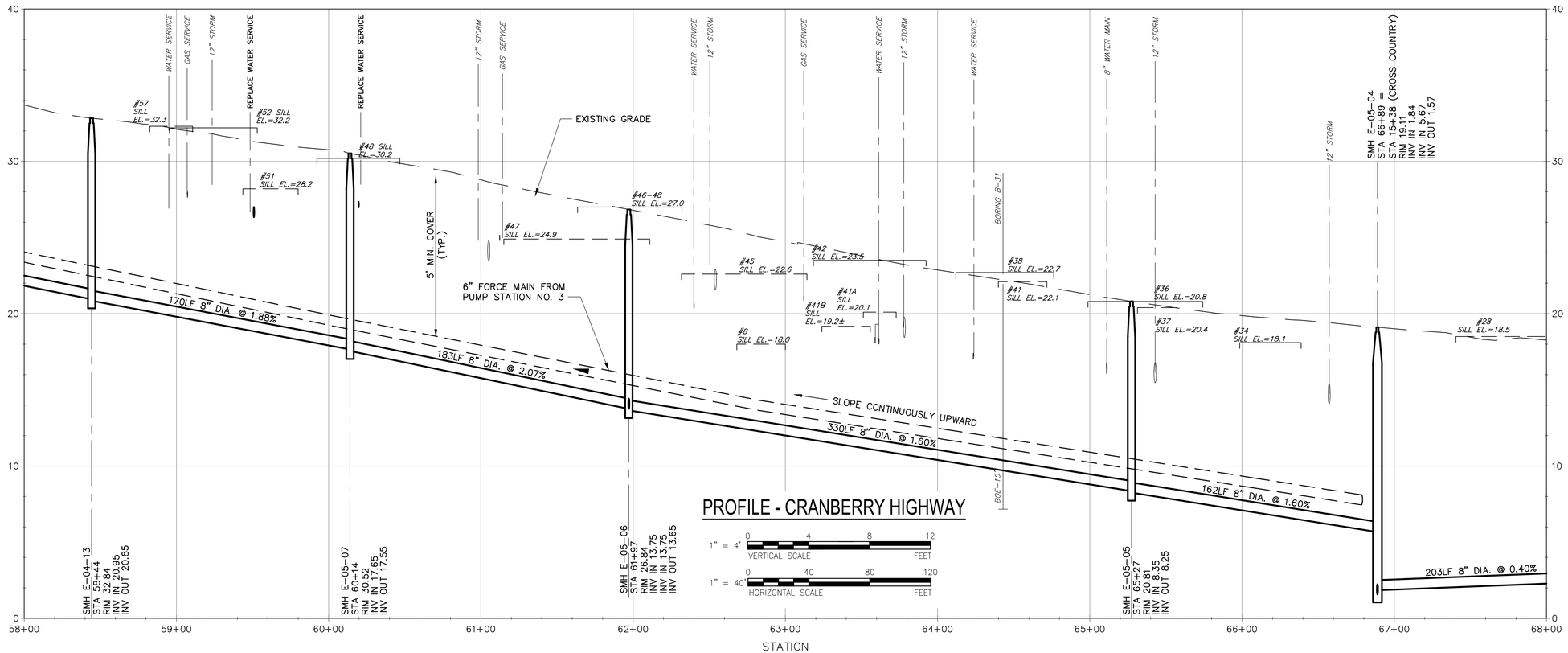

PROFILE - CRANBERRY HIGHWAY

1" = 4' VERTICAL SCALE (0, 4, 8, 12 FEET)

1" = 40' HORIZONTAL SCALE (0, 40, 80, 120 FEET)

AECOM

PROJECT

DOWNTOWN AREA COLLECTION SYSTEM AND PUMP STATIONS

CONTRACT No. 2019-02
SRF No. 4486

OWNER

TOWN OF ORLEANS, MA
19 SCHOOL ROAD
ORLEANS, MA 02653
(508) 240-3700

ENGINEER

AECOM TECHNICAL SERVICES, INC.
9 JONATHAN BOURNE DRIVE
POCASSET, MA 02559
PHONE: (508) 833-6950
www.aecom.com

REGISTRATION

COMMONWEALTH OF MASSACHUSETTS
THOMAS E. PARECE
CIVIL
No. 34463
REGISTERED PROFESSIONAL ENGINEER
12/19/2019

ISSUE/REVISION

I/R	DATE	DESCRIPTION

PROJECT NUMBER

60587515

Designed By:	M. CURRAN
Drawn By:	M. CURRAN
Dept Check:	T. PARECE
Proj Check:	M. DONOGHUE
Date:	JANUARY 2020
Scale:	AS NOTED

DISCIPLINE

CIVIL

SHEET TITLE

PLAN AND PROFILE SEWER CRANBERRY HIGHWAY II

SHEET NUMBER

03 C-113

Last saved by: CURRANM(2020-02-04) Last Plotted: 2020-02-04
Filename: L:\WORK\60\476644 - ORLEANS DOWNTOWN SEWER\C3D - DOWNTOWN_SOURCE DRAWINGS\PS-3 - DOWNTOWN.DWG

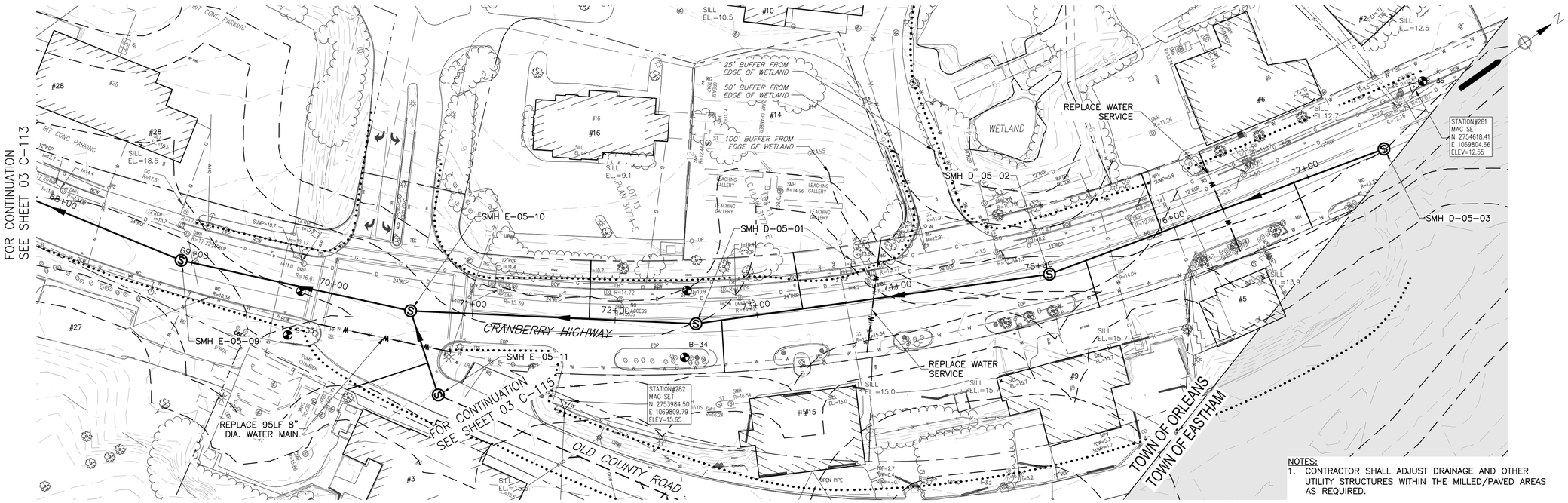

PLAN - CRANBERRY HIGHWAY

SCALE: 1"=40'

NOTES:

1. CONTRACTOR SHALL ADJUST DRAINAGE AND OTHER UTILITY STRUCTURES WITHIN THE MILLED/PAVED AREAS AS REQUIRED.
2. CONTRACTOR IS RESPONSIBLE FOR ANY AND ALL REPAIRS TO THE DRAINAGE SYSTEM IF IMPACTED BY THIS WORK.

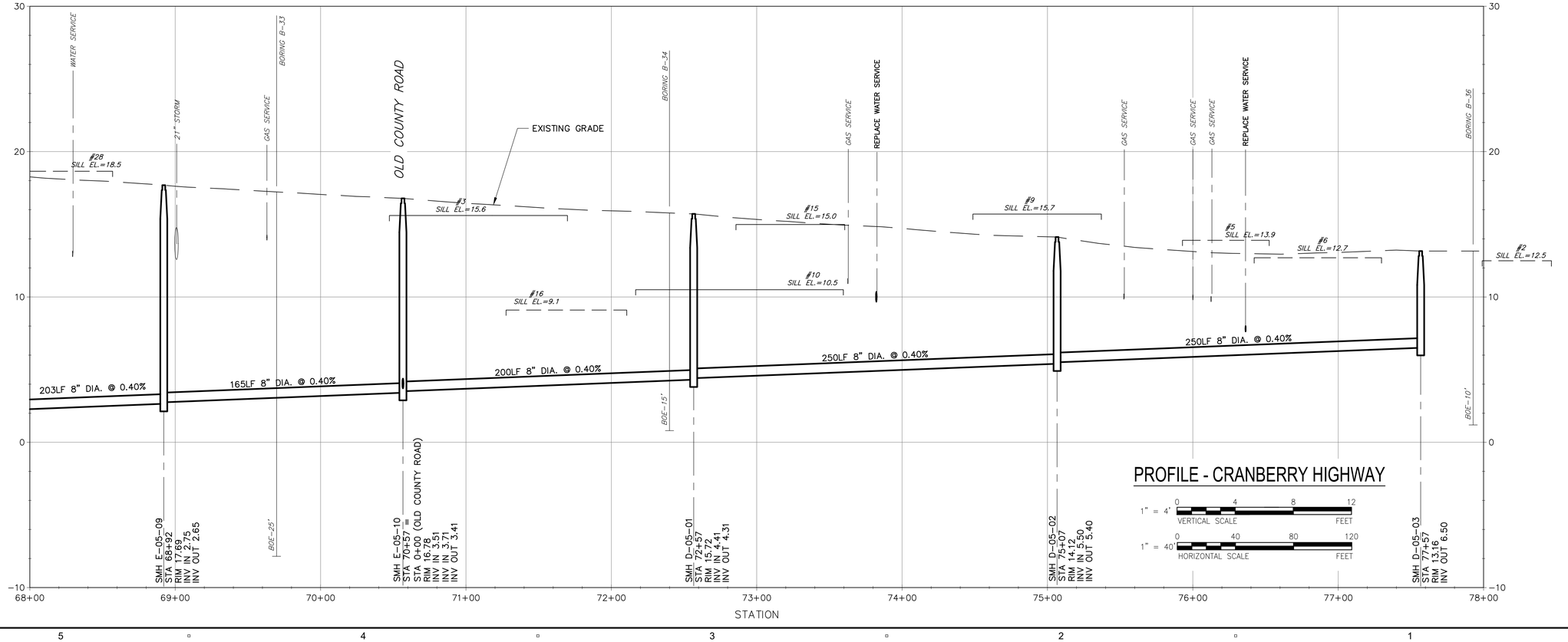

PROFILE - CRANBERRY HIGHWAY

1" = 4' VERTICAL SCALE (0, 4, 8, 12 FEET)

1" = 40' HORIZONTAL SCALE (0, 40, 80, 120 FEET)

AECOM

PROJECT

DOWNTOWN AREA COLLECTION SYSTEM AND PUMP STATIONS

CONTRACT No. 2019-02
SRF No. 4486

OWNER

TOWN OF ORLEANS, MA
19 SCHOOL ROAD
ORLEANS, MA 02653
(508) 240-3700

ENGINEER

AECOM TECHNICAL SERVICES, INC.
9 JONATHAN BOURNE DRIVE
POCASSET, MA 02559
PHONE: (508) 833-6950
www.aecom.com

REGISTRATION

COMMONWEALTH OF MASSACHUSETTS
THOMAS E. PARECE
CIVIL
No. 34463
REGISTERED PROFESSIONAL ENGINEER
9/18/2020

ISSUE/REVISION

I/R	DATE	DESCRIPTION

PROJECT NUMBER

60587515

Designed By:	M. CURRAN
Drawn By:	M. CURRAN
Dept Check:	T. PARECE
Proj Check:	M. DONOGHUE
Date:	JANUARY 2020
Scale:	AS NOTED

DISCIPLINE

CIVIL

SHEET TITLE

PLAN AND PROFILE SEWER CRANBERRY HIGHWAY III

SHEET NUMBER

03 C-114

Last saved by: CURRANM(2020-02-04) Last Plotted: 2020-02-04
Filename: L:\WORK\60478644 - ORLEANS DOWNTOWN SEWER\C3D - DOWNTOWN_SOURCE DRAWINGS\PS-3 - DOWNTOWN.DWG

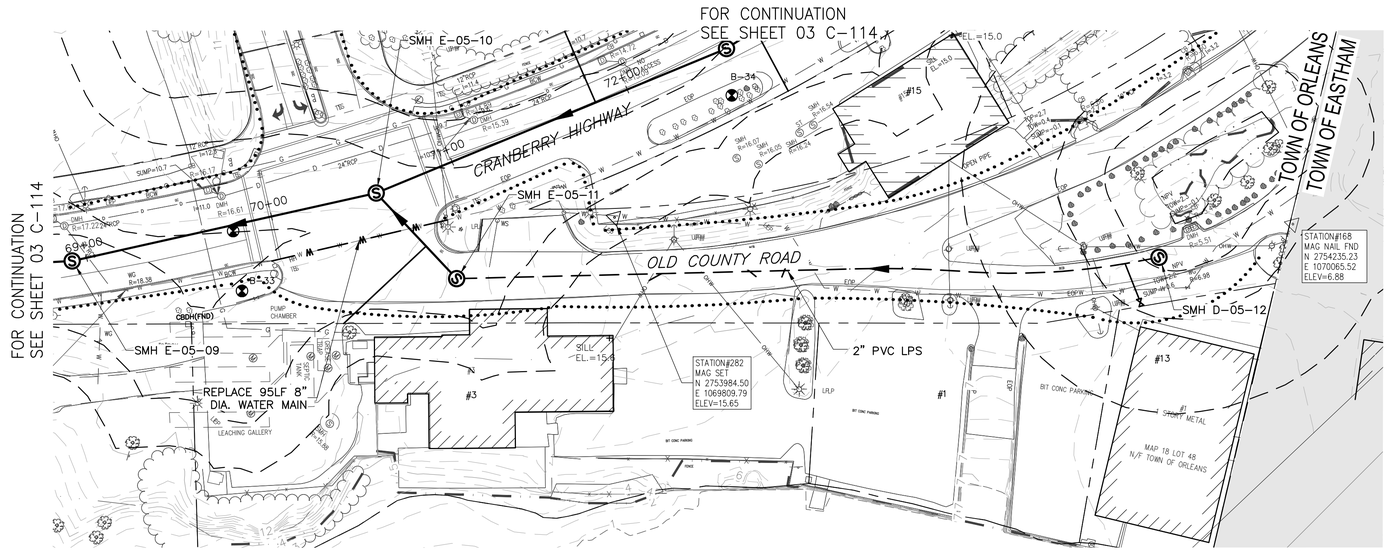

PLAN - OLD COUNTY ROAD

SCALE: 1"=40'

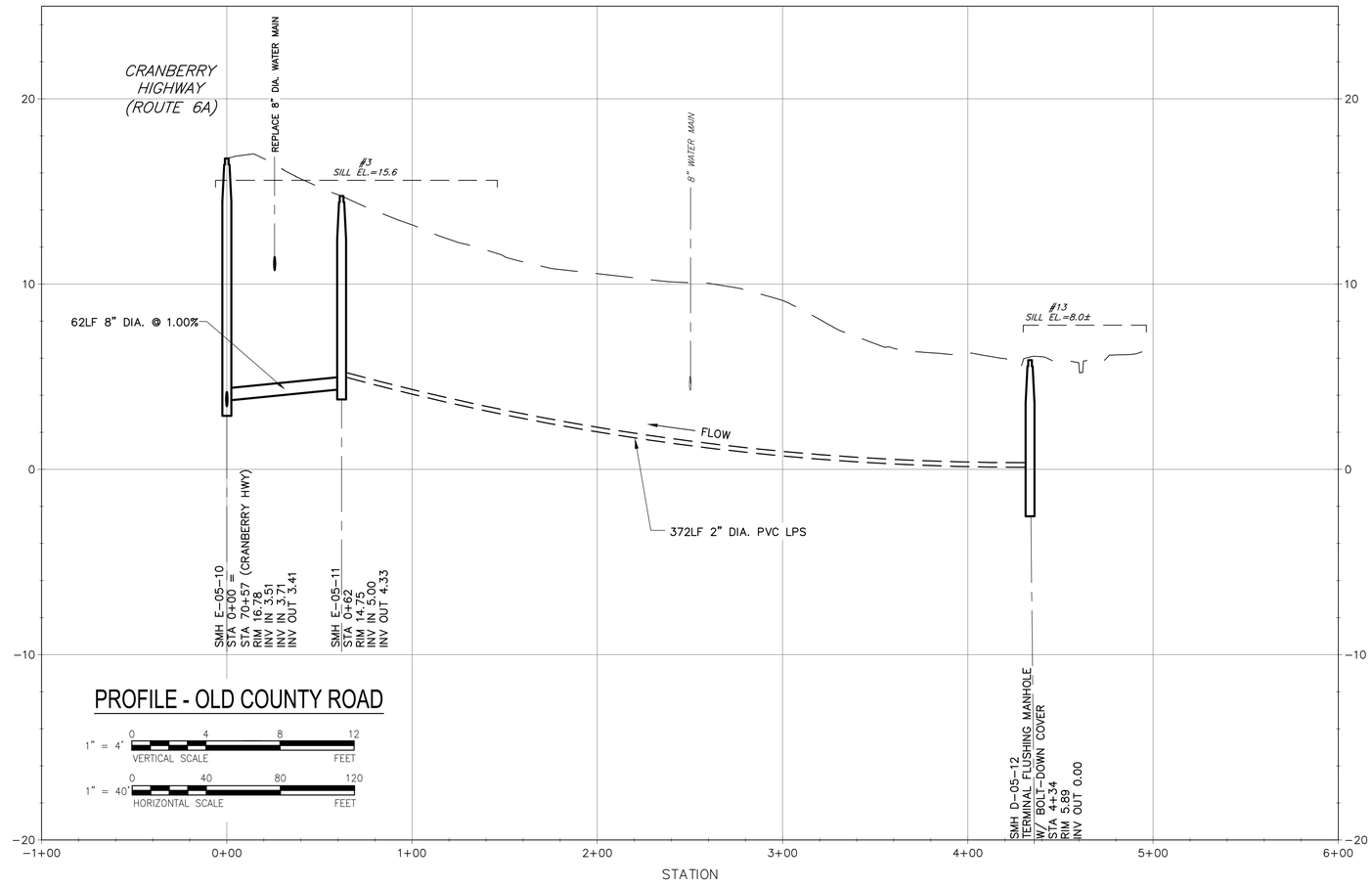

PROFILE - OLD COUNTY ROAD

1" = 4' VERTICAL SCALE (0, 4, 8, 12 FEET)

1" = 40' HORIZONTAL SCALE (0, 40, 80, 120 FEET)

AECOM

PROJECT

DOWNTOWN AREA COLLECTION SYSTEM AND PUMP STATIONS

CONTRACT No. 2019-02
SRF No. 4486

OWNER

TOWN OF ORLEANS, MA
19 SCHOOL ROAD
ORLEANS, MA 02653
(508) 240-3700

ENGINEER

AECOM TECHNICAL SERVICES, INC.
9 JONATHAN BOURNE DRIVE
POCASSET, MA 02559
PHONE: (508) 833-6950
www.aecom.com

REGISTRATION

COMMONWEALTH OF MASSACHUSETTS
THOMAS E. PARECE
CIVIL
No. 34463
REGISTERED PROFESSIONAL ENGINEER

ISSUE/REVISION

I/R	DATE	DESCRIPTION

PROJECT NUMBER

60587515

Designed By:	M. DONOGHUE
Drawn By:	M. CURRAN
Dept Check:	T. PARECE
Proj Check:	M. DONOGHUE
Date:	JANUARY 2020
Scale:	AS NOTED

DISCIPLINE

CIVIL

SHEET TITLE

PLAN AND PROFILE SEWER OLD COUNTY ROAD

SHEET NUMBER

03 C-115

Last saved by: CURRANM (2020-02-04) Last Plotted: 2020-02-04
Filename: L:\WORK\60476644 - ORLEANS DOWNTOWN SEWER\C3D - DOWNTOWN_SOURCE DRAWINGS\PS-3 - DOWNTOWN.DWG

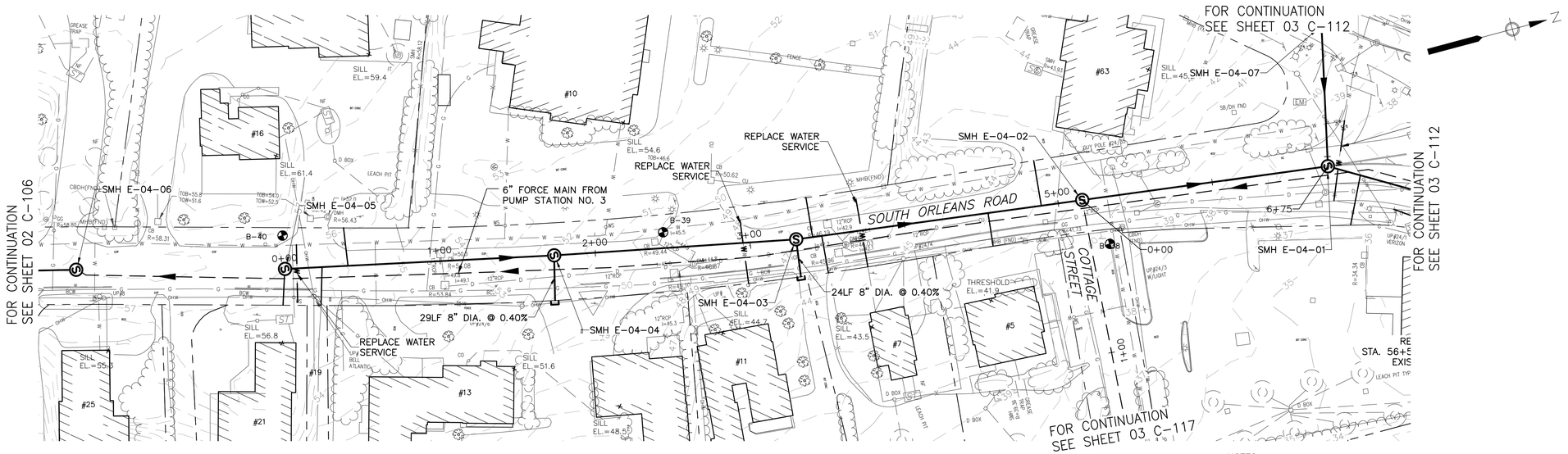

PLAN - SOUTH ORLEANS ROAD

SCALE: 1"=40'

NOTES:
1. CONTRACTOR SHALL ADJUST DRAINAGE AND OTHER UTILITY STRUCTURES WITHIN THE MILLED/PAVED AREAS AS REQUIRED.
2. CONTRACTOR IS RESPONSIBLE FOR ANY AND ALL REPAIRS TO THE DRAINAGE SYSTEM IF IMPACTED BY THIS WORK.

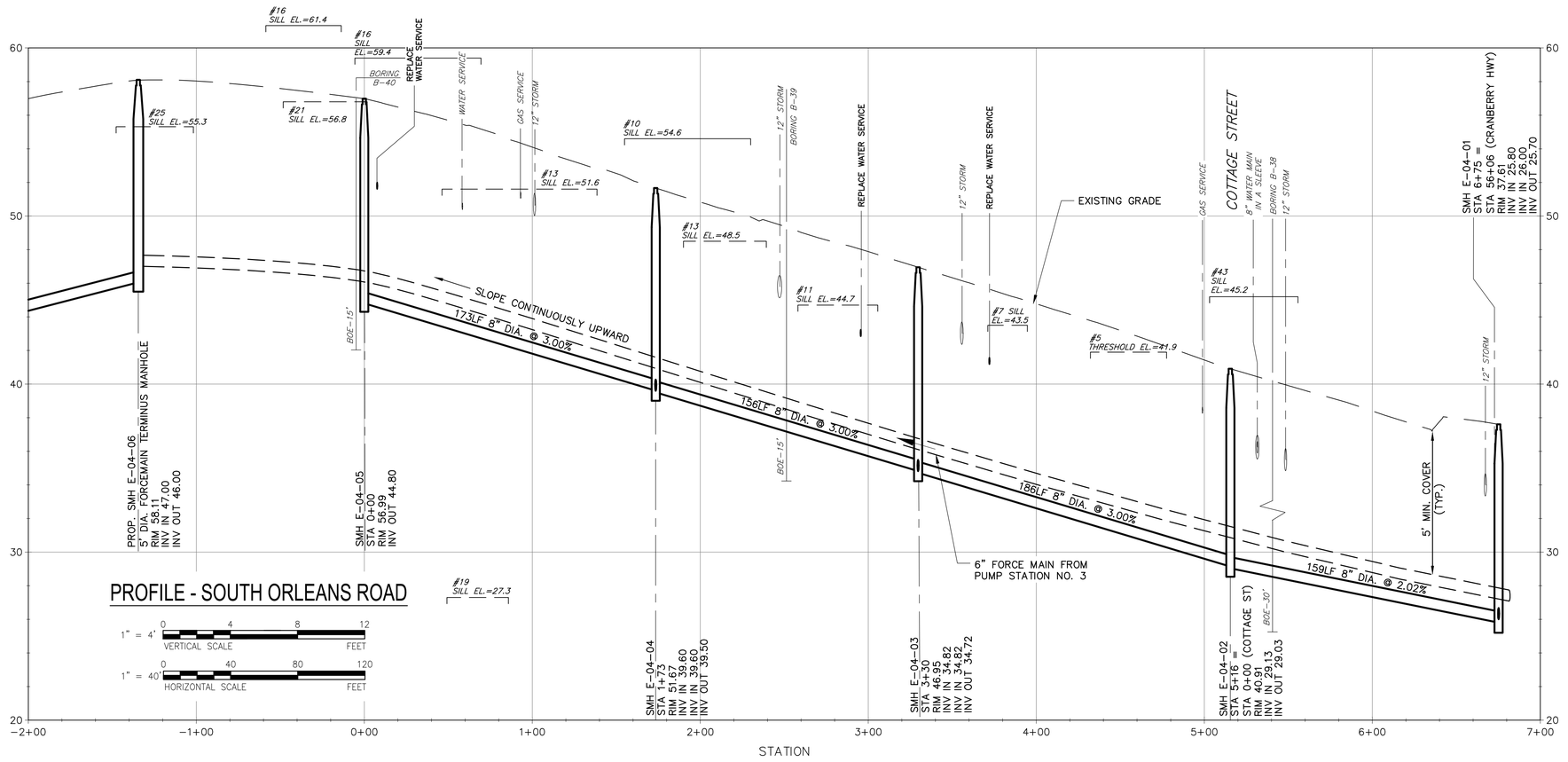

PROFILE - SOUTH ORLEANS ROAD

AECOM

PROJECT

DOWNTOWN AREA COLLECTION SYSTEM AND PUMP STATIONS

CONTRACT No. 2019-02
SRF No. 4486

OWNER

TOWN OF ORLEANS, MA
19 SCHOOL ROAD
ORLEANS, MA 02653
(508) 240-3700

ENGINEER

AECOM TECHNICAL SERVICES, INC.
9 JONATHAN BOURNE DRIVE
POCASSET, MA 02559
PHONE: (508) 833-6950
www.aecom.com

REGISTRATION



ISSUE/REVISION

I/R	DATE	DESCRIPTION

PROJECT NUMBER

60587515

Designed By:	M. CURRAN
Drawn By:	M. CURRAN
Dept Check:	T. PARECE
Proj Check:	M. DONOGHUE
Date:	JANUARY 2020
Scale:	AS NOTED

DISCIPLINE

CIVIL

SHEET TITLE

PLAN AND PROFILE SEWER SOUTH ORLEANS RD

SHEET NUMBER

03 C-116

Last saved by: CURRANM(2020-02-04) Last Plotted: 2020-02-04
Filename: L:\WORK\60476644 - ORLEANS DOWNTOWN SEWER\C3D - DOWNTOWN_SOURCE DRAWINGS\PS-3 - DOWNTOWN.DWG

FOR CONTINUATION
SEE SHEET 03 C-116

FOR CONTINUATION
SEE SHEET 03 C-116

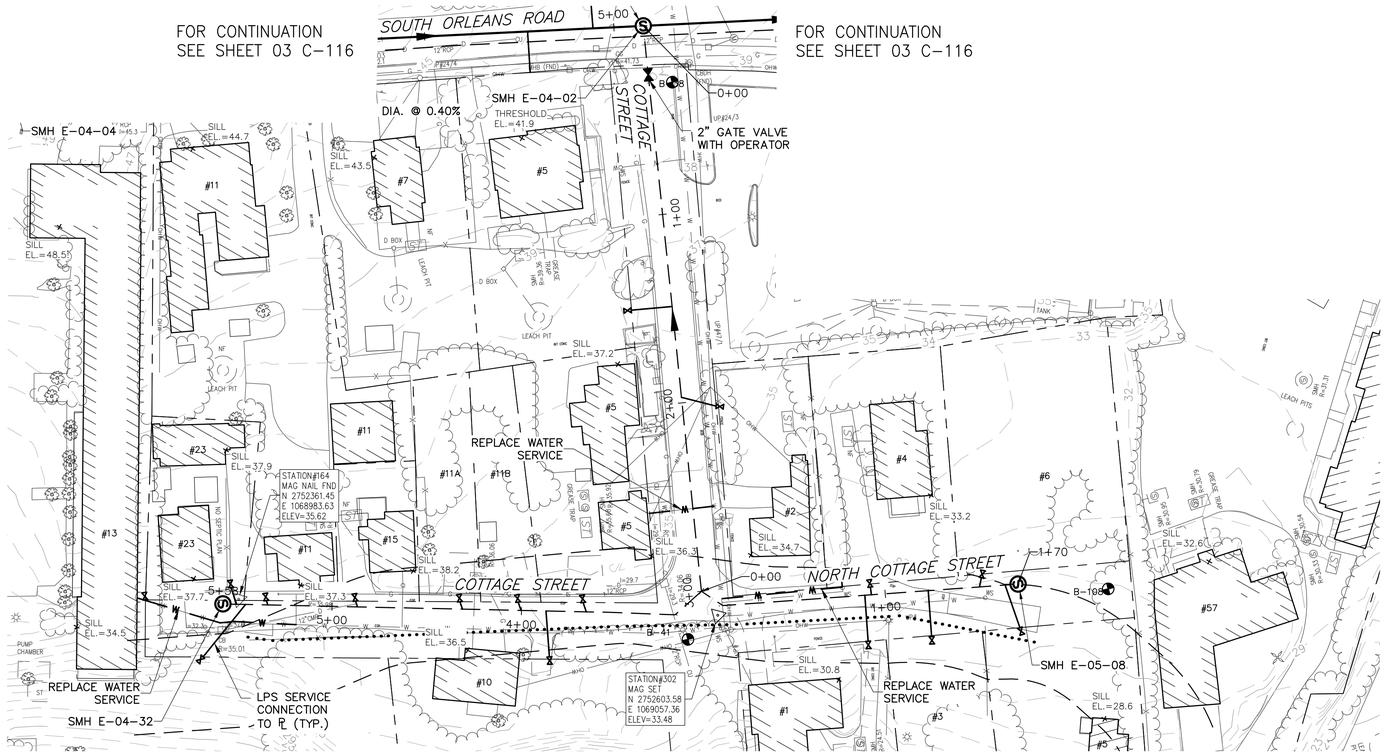

PLAN - COTTAGE AND NORTH COTTAGE STREET

SCALE: 1"=40'



PROFILE - COTTAGE STREET

1" = 4' VERTICAL SCALE 0 4 8 12 FEET

1" = 40' HORIZONTAL SCALE 0 40 80 120 FEET

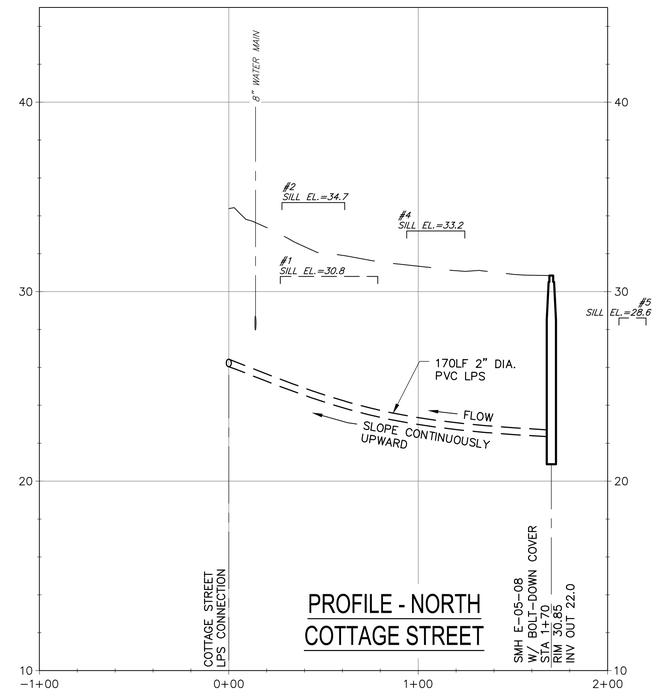

PROFILE - NORTH COTTAGE STREET

AECOM

PROJECT

DOWNTOWN AREA COLLECTION SYSTEM AND PUMP STATIONS

CONTRACT No. 2019-02
SRF No. 4486

OWNER

TOWN OF ORLEANS, MA
19 SCHOOL ROAD
ORLEANS, MA 02653
(508) 240-3700

ENGINEER

AECOM TECHNICAL SERVICES, INC.
9 JONATHAN BOURNE DRIVE
POCASSET, MA 02559
PHONE: (508) 833-6950
www.aecom.com

REGISTRATION

COMMONWEALTH OF MASSACHUSETTS
THOMAS E. PARECE
CIVIL
No. 34463
REGISTERED PROFESSIONAL ENGINEER
12/31/2020

ISSUE/REVISION

I/R	DATE	DESCRIPTION

PROJECT NUMBER

60587515

Designed By:	M. CURRAN
Drawn By:	M. CURRAN
Dept Check:	T. PARECE
Proj Check:	M. DONOGHUE
Date:	JANUARY 2020
Scale:	AS NOTED

DISCIPLINE

CIVIL

SHEET TITLE

PLAN AND PROFILE SEWER COTTAGE STREET AND NORTH COTTAGE STREET

SHEET NUMBER

03 C-117

Last saved by: CURRANM (2020-02-04) Last Plotted: 2020-02-04
Filename: L:\WORK\60476644 - ORLEANS DOWNTOWN SEWER\C3D - DOWNTOWN_SOURCE DRAWINGS\PS-3 - DOWNTOWN.DWG

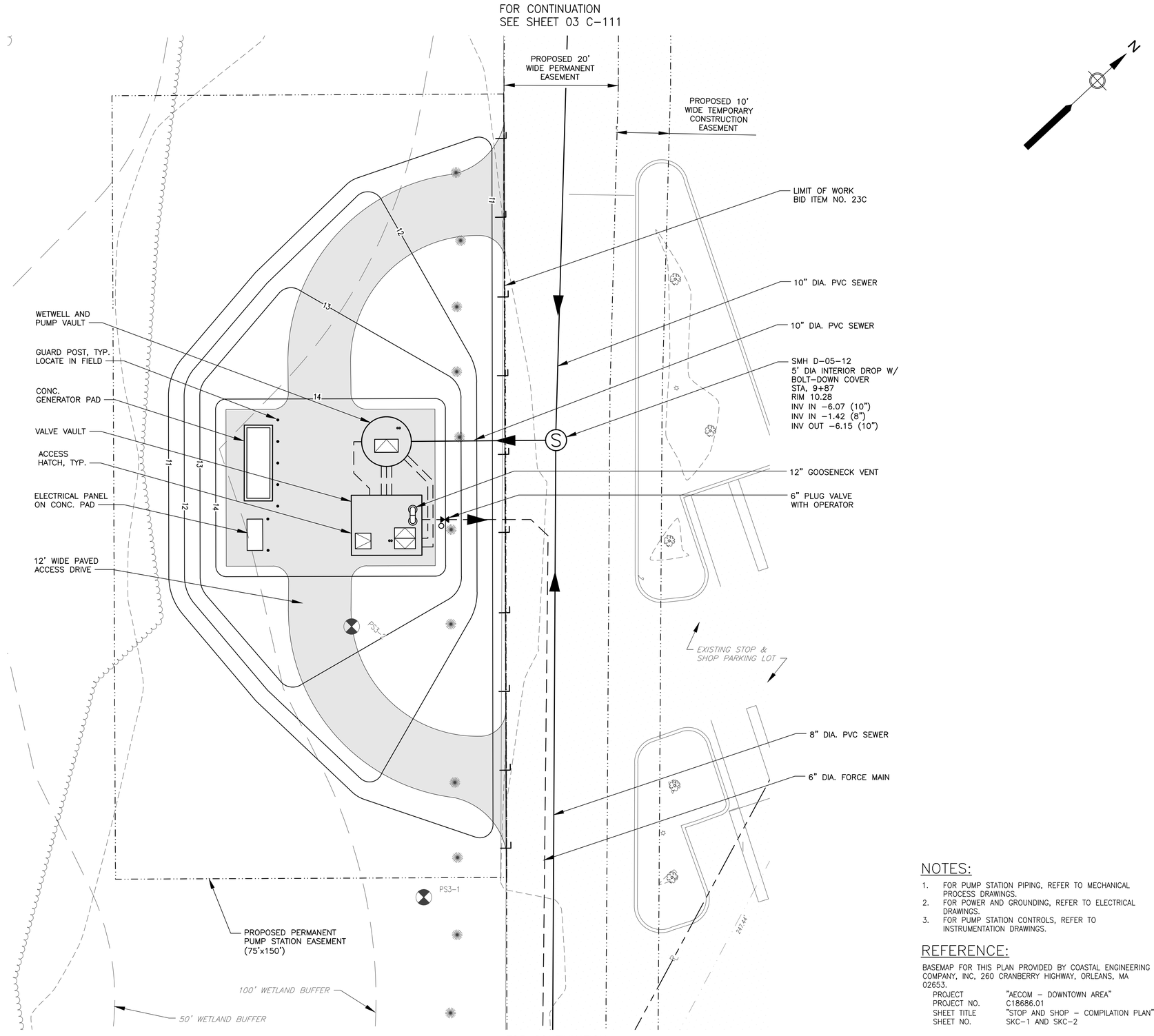

SITE PLAN
SCALE: 1" = 10'–0"

FOR CONTINUATION
SEE SHEET 03 C–111

NOTES:

1. FOR PUMP STATION PIPING, REFER TO MECHANICAL PROCESS DRAWINGS.
2. FOR POWER AND GROUNDING, REFER TO ELECTRICAL DRAWINGS.
3. FOR PUMP STATION CONTROLS, REFER TO INSTRUMENTATION DRAWINGS.

REFERENCE:

BASEMAP FOR THIS PLAN PROVIDED BY COASTAL ENGINEERING COMPANY, INC, 260 CRANBERRY HIGHWAY, ORLEANS, MA 02653.

PROJECT	"AECOM – DOWNTOWN AREA"
PROJECT NO.	C18686.01
SHEET TITLE	"STOP AND SHOP – COMPILATION PLAN"
SHEET NO.	SKC–1 AND SKC–2

1" = 10' SCALE 0 10 20 30 FEET

AECOM

PROJECT

DOWNTOWN AREA COLLECTION SYSTEM AND PUMP STATIONS

CONTRACT No. 2019-02
SRF No. 4486

OWNER

TOWN OF ORLEANS, MA
19 SCHOOL ROAD
ORLEANS, MA 02653
(508) 240-3700

ENGINEER

AECOM TECHNICAL SERVICES, INC.
9 JONATHAN BOURNE DRIVE
POCASSET, MA 02559
PHONE: (508) 833-6950
www.aecom.com

REGISTRATION

COMMONWEALTH OF MASSACHUSETTS
THOMAS E. PARECE
CIVIL
No. 34463
REGISTERED PROFESSIONAL ENGINEER

ISSUE/REVISION

I/R	DATE	DESCRIPTION

PROJECT NUMBER

60587515

Designed By:	M. CURRAN
Drawn By:	M. CURRAN
Dept Check:	T. PARECE
Proj Check:	M. DONOGHUE
Date:	JANUARY 2020
Scale:	AS NOTED

DISCIPLINE

CIVIL

SHEET TITLE

PUMP STATION NO. 3 SITE PLAN

SHEET NUMBER

03 C-401

Last saved by: CURRANM(2020-01-28) Last Plotted: 2020-02-04
Filename: P:\60476644 - ORLEANS DOWNTOWN PUMP STATIONS\SHEETS\C\03 C-401.DWG

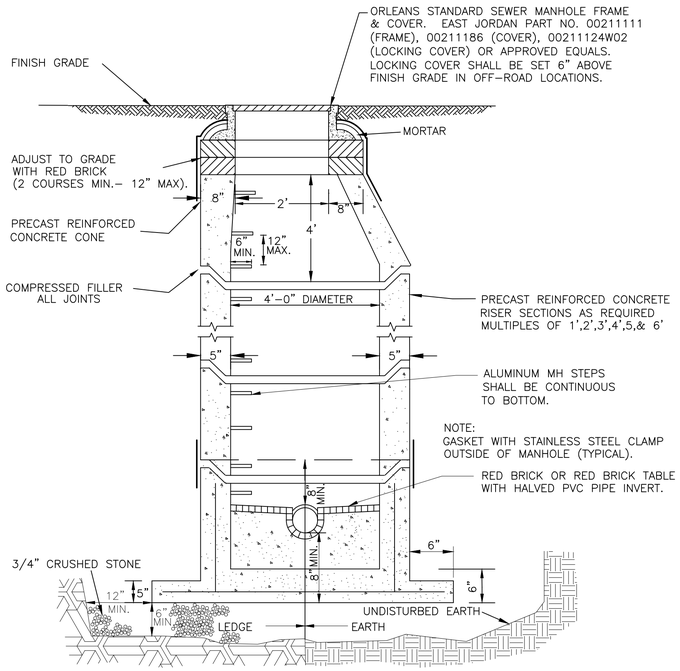

TYPICAL PRECAST CONCRETE SEWER MANHOLE
(NOT TO SCALE)

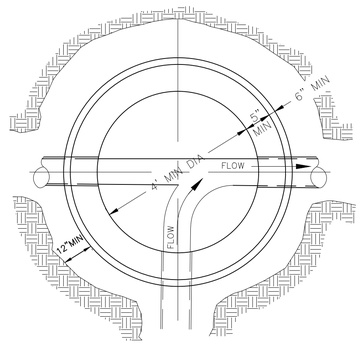

TOP VIEW

INVERT TABLE PLAN
(NOT TO SCALE)

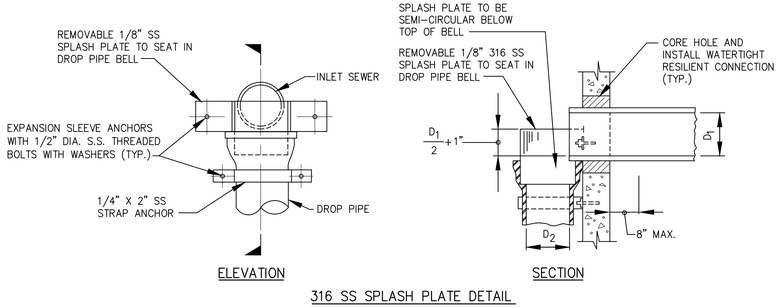

316 SS SPLASH PLATE DETAIL

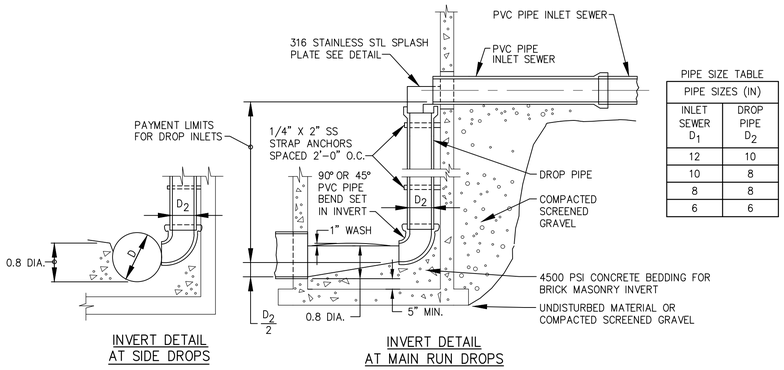

PIPE SIZE TABLE	
PIPE SIZES (IN)	
INLET SEWER D_1	DROP PIPE D_2
12	10
10	8
8	8
6	6

INSIDE DROP INLETS FOR PVC PIPE SEWERS 12 INCH DIAMETER AND SMALLER
NOT TO SCALE

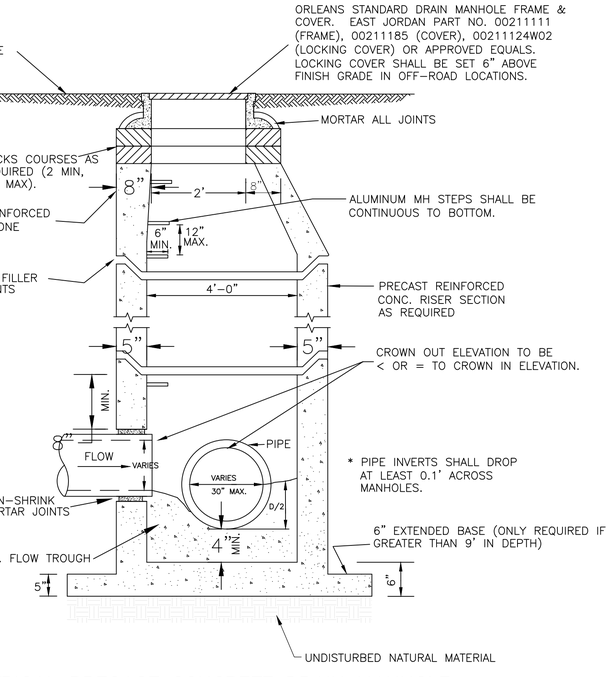

TYPICAL PRECAST CONCRETE DRAIN MANHOLE
ENTIRE STRUCTURE TO BE H20 LOADING
(NOT TO SCALE)

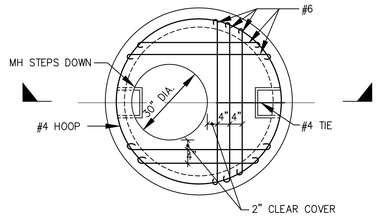

PLAN OF PRECAST SLAB

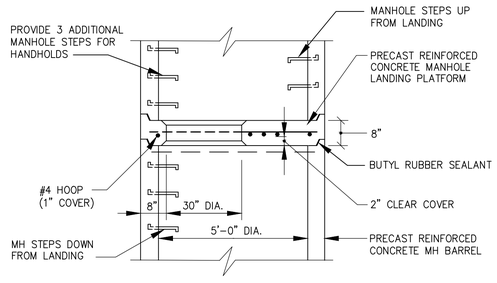

SECTION

NOTE:
LANDING PLATFORMS ARE TO BE INSTALLED AT THE MIDPOINT OF MANHOLES EXCEEDING 20' IN DEPTH.

PRECAST MANHOLE LANDING PLATFORM
NOT TO SCALE

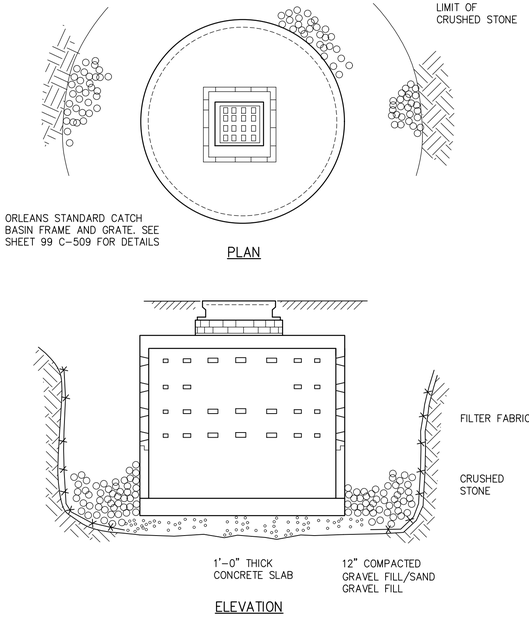

LEACHING CATCH BASIN
NOT TO SCALE

AECOM

PROJECT

DOWNTOWN AREA COLLECTION SYSTEM AND PUMP STATIONS

CONTRACT No. 2019-02
SRF No. 4486

OWNER

TOWN OF ORLEANS, MA
19 SCHOOL ROAD
ORLEANS, MA 02653
(508) 240-3700

ENGINEER

AECOM TECHNICAL SERVICES, INC.
9 JONATHAN BOURNE DRIVE
POCASSET, MA 02559
PHONE: (508) 833-6950
www.aecom.com

REGISTRATION

COMMONWEALTH OF MASSACHUSETTS
THOMAS E. PARECE
CIVIL
No. 34493
REGISTERED
PROFESSIONAL ENGINEER
CIVIL

ISSUE/REVISION

I/R	DATE	DESCRIPTION

PROJECT NUMBER

60587515

Designed By:	M. CURRAN
Drawn By:	M. CURRAN
Dept Check:	T. PARECE
Proj Check:	M. DONOGHUE
Date:	JANUARY 2020
Scale:	AS NOTED

DISCIPLINE

CIVIL

SHEET TITLE

DETAILS I

SHEET NUMBER

99 C-501

Last saved by: CURRANM(2020-02-04) Last Plotted: 2020-02-04
Filename: L:\WORK\60476844 - ORLEANS DOWNTOWN SEWER\SHEETS\C\99 C-501.DWG

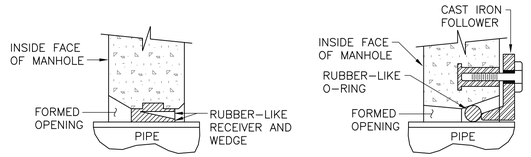

PRESS-WEDGE II
(OR EQUAL)

RES-SEAL
(OR EQUAL)

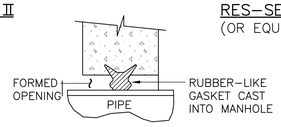

A-LOK
(OR EQUAL)

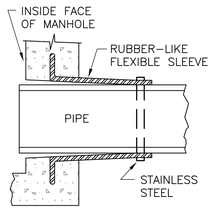

LOCK-JOINT FLEXIBLE
MANHOLE SLEEVE
(OR EQUAL)

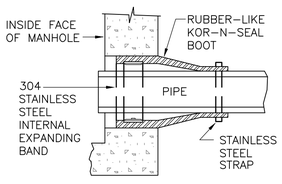

KOR-N-SEAL
JOINT SLEEVE
(OR EQUAL)

NOTE:
ALL GASKETS, SEALANTS, MORTAR ETC. SHALL BE INSTALLED IN ACCORDANCE WITH MANUFACTURERS WRITTEN INSTRUCTIONS.

TYPICAL SLEEVE DETAILS
NOT TO SCALE

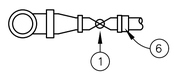

PLAN

CLEANOUT MATERIALS

1. S.S. BALL VALVE – 2"
2. 4"x2" REDUCER, DUCTILE IRON
3. 90° BASE ELBOW – DUCTILE IRON
4. S.S. STRAP SUPPORT
5. HOSE CONNECTION – 4" QUICK DISCONNECT WITH CAP, BRASS
6. PVC/DUCTILE IRON ADAPTERS

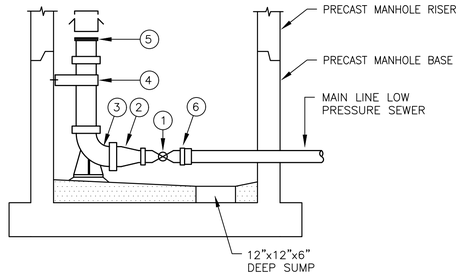

ELEVATION

LOW PRESSURE SEWER TERMINAL FLUSHING DETAIL
NOT TO SCALE

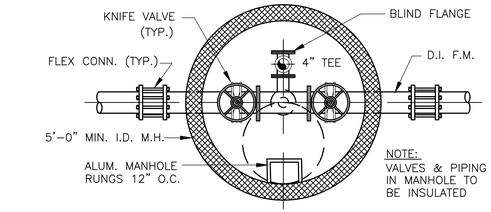

PLAN

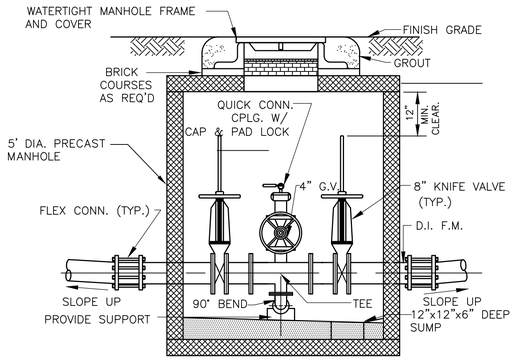

FORCE MAIN DRAIN MANHOLE

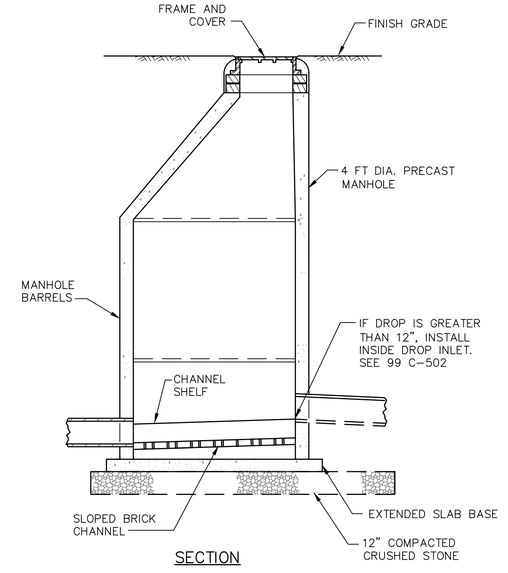

SECTION

FORCE MAIN DISCHARGE INTO MANHOLE
NOT TO SCALE

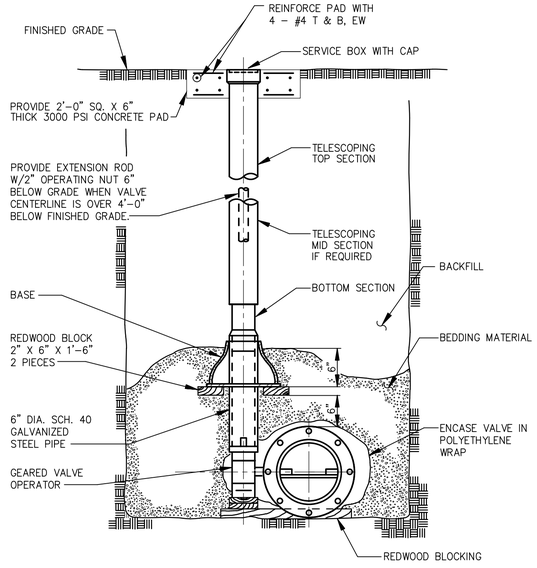

BURIED PLUG VALVE
NOT TO SCALE

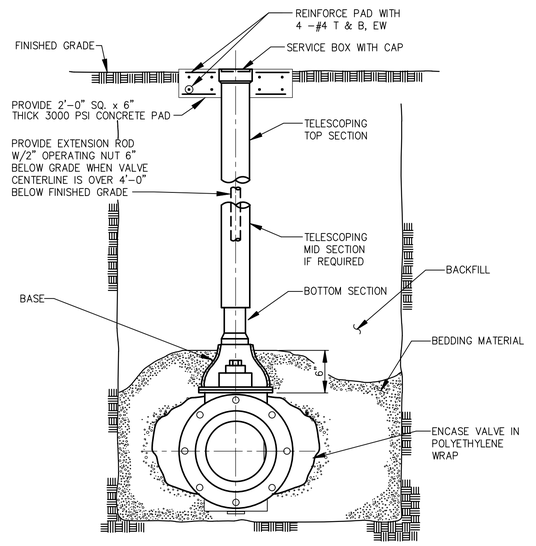

BURIED GATE VALVE
NOT TO SCALE

AECOM

PROJECT

DOWNTOWN AREA COLLECTION SYSTEM AND PUMP STATIONS

CONTRACT No. 2019-02
SRF No. 4486

OWNER

TOWN OF ORLEANS, MA
19 SCHOOL ROAD
ORLEANS, MA 02653
(508) 240-3700

ENGINEER

AECOM TECHNICAL SERVICES, INC.
9 JONATHAN BOURNE DRIVE
POCASSET, MA 02559
PHONE: (508) 833-6950
www.aecom.com

REGISTRATION

COMMONWEALTH OF MASSACHUSETTS
THOMAS E. PARECE
CIVIL
No. 34463
REGISTERED PROFESSIONAL ENGINEER

ISSUE/REVISION

I/R	DATE	DESCRIPTION

PROJECT NUMBER

60587515

Designed By:	M. CURRAN
Drawn By:	M. CURRAN
Dept Check:	T. PARECE
Proj Check:	M. DONOGHUE
Date:	JANUARY 2020
Scale:	AS NOTED

DISCIPLINE

CIVIL

SHEET TITLE

DETAILS II

SHEET NUMBER

99 C-502

Last saved by: CURRANM(2020-02-04) Last Plotted: 2020-02-04
Filename: L:\WORK\60476644 - ORLEANS DOWNTOWN SEWER\SHEETS\C\99 C-502.DWG

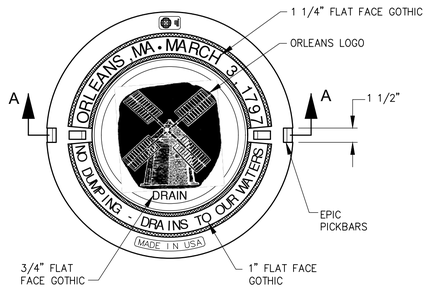

PLAN–DRAIN COVER

MFR: EJUSA
PART NO. 00211185
OR APPROVED EQUAL

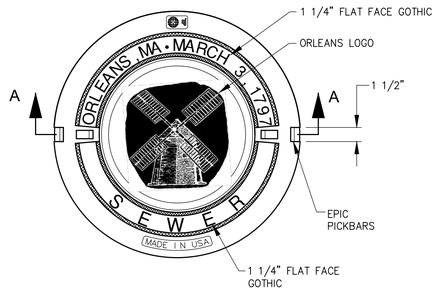

PLAN–SEWER COVER

MFR: EJUSA
PART NO. 00211186
OR APPROVED EQUAL

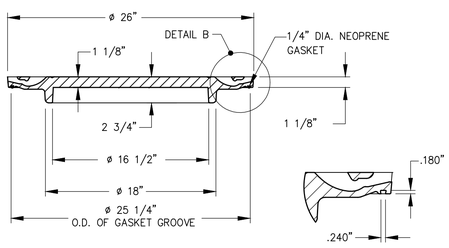

SECTION A–A

DETAIL B



ORLEANS STANDARD DRAIN AND SEWER MANHOLE COVER

(NOT TO SCALE)

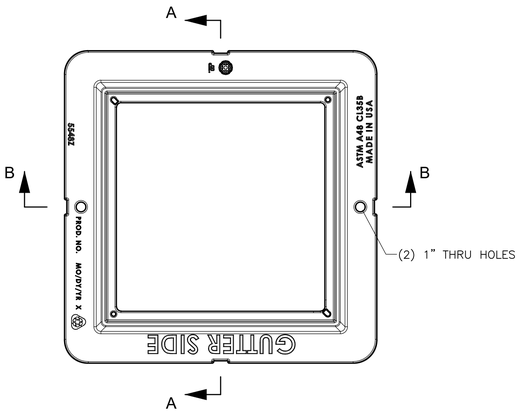

PLAN

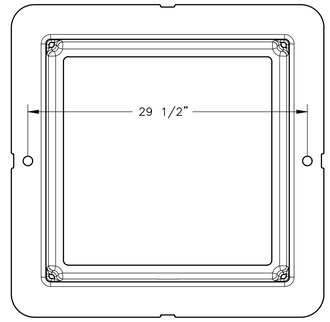

BOTTOM

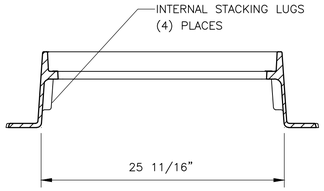

SECTION A–A

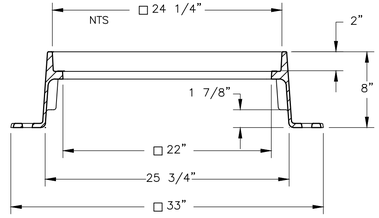

SECTION B–B

ORLEANS STANDARD 4–FLANGE CATCH BASIN FRAME

(NOT TO SCALE)

MFR: EJUSA
PART NO. 00554811
OR APPROVED EQUAL.

*3–FLANGE FRAME AVAILABLE AS PART NO. 00554813

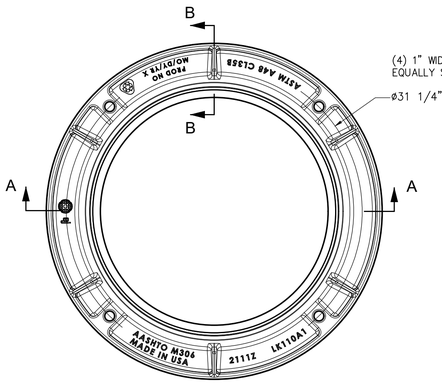

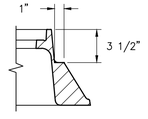

SECTION B–B

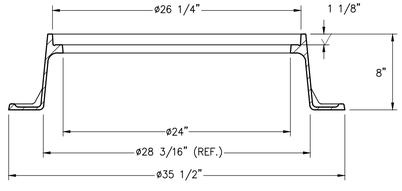

SECTION A–A

MFR: EJUSA
PART NO. 00211111
OR APPROVED EQUAL

ORLEANS STANDARD MANHOLE FRAME

(NOT TO SCALE)

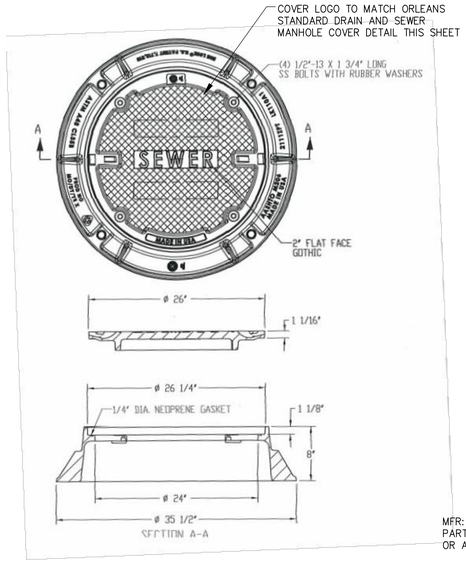

MFR: EJUSA
PART NO. 00211124W02
OR APPROVED EQUAL

ORLEANS STANDARD BOLTED AND GASKETED MANHOLE FRAME AND COVER

(NOT TO SCALE)

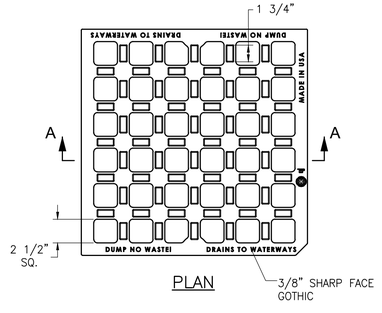

PLAN

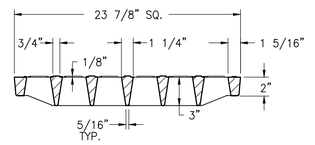

SECTION A–A

MFR: EJUSA
PART NO. 00552060
OR APPROVED EQUAL

ORLEANS STANDARD HEAVY CATCH BASIN GRATE

(NOT TO SCALE)

AECOM

PROJECT

DOWNTOWN AREA COLLECTION SYSTEM AND PUMP STATIONS

CONTRACT No. 2019-02
SRF No. 4486

OWNER

TOWN OF ORLEANS, MA
19 SCHOOL ROAD
ORLEANS, MA 02653
(508) 240-3700

ENGINEER

AECOM TECHNICAL SERVICES, INC.
9 JONATHAN BOURNE DRIVE
POCASSET, MA 02559
PHONE: (508) 833-6950
www.aecom.com

REGISTRATION

COMMONWEALTH OF MASSACHUSETTS
THOMAS E. PARECE
CIVIL
No. 34463
REGISTERED PROFESSIONAL ENGINEER

ISSUE/REVISION

I/R	DATE	DESCRIPTION

PROJECT NUMBER

60587515

Designed By:	M. CURRAN
Drawn By:	M. CURRAN
Dept Check:	T. PARECE
Proj Check:	M. DONOGHUE
Date:	JANUARY 2020
Scale:	AS NOTED

DISCIPLINE

CIVIL

SHEET TITLE

DETAILS III

SHEET NUMBER

99 C-503

Last saved by: CURRANM(2020-02-04) Last Plotted: 2020-02-04
Filename: L:\WORK\60\476644 - ORLEANS DOWNTOWN SEWER\SHEETS\C\99 C-503.DWG

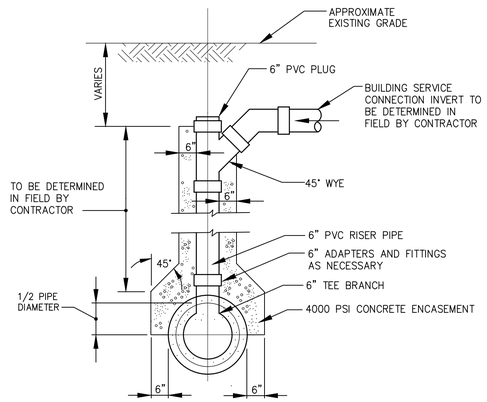

TYPICAL CHIMNEY DETAIL FOR SEWER CONNECTION

NOT TO SCALE

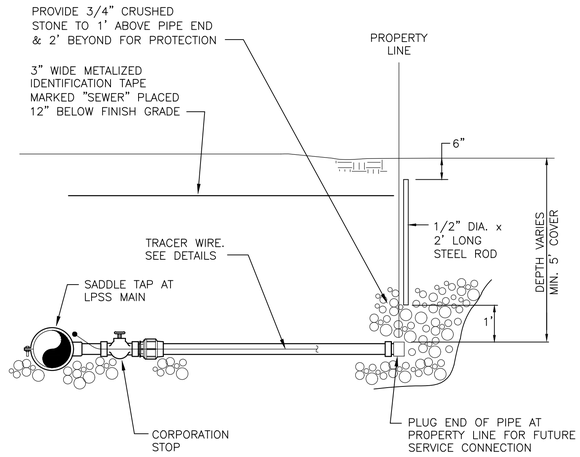

TYPICAL LATERAL STUB CONNECTION ON LOW PRESSURE SEWER MAIN

(NOT TO SCALE)

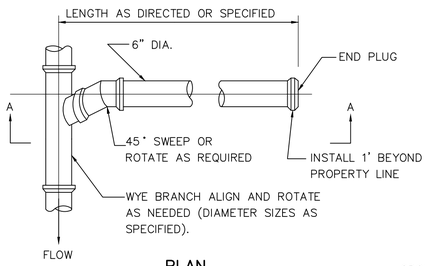

PLAN

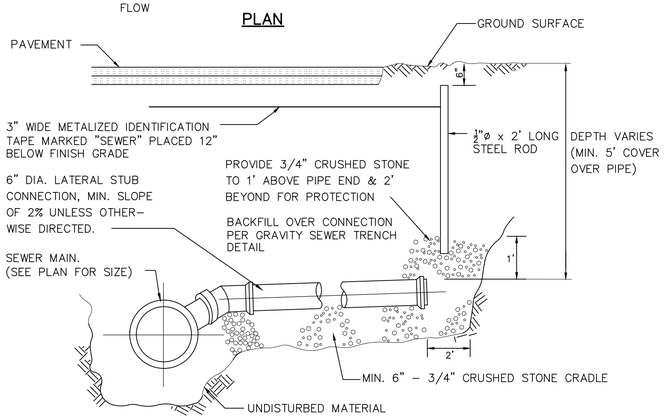

SECTION A-A

LATERAL CONNECTION MANHOLE

WHERE REQUIRED, A MANHOLE TO BE CONSTRUCTED ON A LATERAL CONNECTION. THIS MANHOLE SHALL CONFORM TO THE SAME STANDARDS AS THE MAIN SEWER MANHOLES. (SEE SEWER MANHOLE DETAILS.)

TYPICAL LATERAL STUB CONNECTION

(NOT TO SCALE)

Last saved by: CURRANM(2020-02-04) Last Plotted: 2020-02-04
Filename: L:\WORK\60476844 - ORLEANS DOWNTOWN SEWERS\SHEETS\C\99 C-504.DWG

AECOM

PROJECT

DOWNTOWN AREA COLLECTION SYSTEM AND PUMP STATIONS

CONTRACT No. 2019-02
SRF No. 4486

OWNER

TOWN OF ORLEANS, MA
19 SCHOOL ROAD
ORLEANS, MA 02653
(508) 240-3700

ENGINEER

AECOM TECHNICAL SERVICES, INC.
9 JONATHAN BOURNE DRIVE
POCASSET, MA 02559
PHONE: (508) 833-6950
www.aecom.com

REGISTRATION

COMMONWEALTH OF MASSACHUSETTS
THOMAS E. PARECE
CIVIL
No. 34463
REGISTERED PROFESSIONAL ENGINEER
2/4/2020

ISSUE/REVISION

I/R	DATE	DESCRIPTION

PROJECT NUMBER

60587515

Designed By:	M. CURRAN
Drawn By:	M. CURRAN
Dept Check:	T. PARECE
Proj Check:	M. DONOGHUE
Date:	JANUARY 2020
Scale:	AS NOTED

DISCIPLINE

CIVIL

SHEET TITLE

DETAILS IV

SHEET NUMBER

99 C-504

1. SET POSTS AND EXCAVATE A 4" X 4" TRENCH UPSLOPE ALONG THE LINE OF POSTS.

2. STAPLE 4" MAX. X 4" MAX. WIRE FENCE TO 4' POSTS (1' BURY).

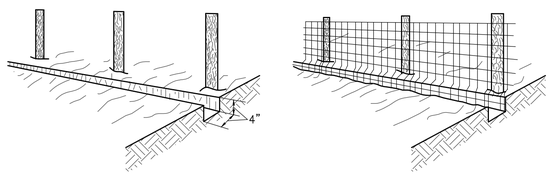

3. ATTACH THE FILTER FABRIC TO THE WIRE FENCE AND EXTEND IT INTO THE TRENCH.

4. BACKFILL AND COMPACT THE EXCAVATED SOIL

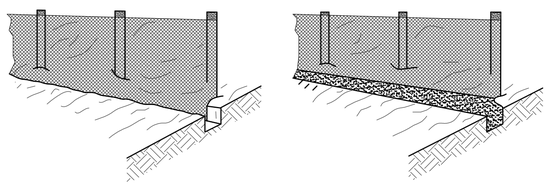

EXTENSION OF FABRIC AND WIRE FENCE INTO THE TRENCH

SILT SOCK. BUTT TOGETHER AND HOLD IN PLACE WITH TWO 2"x2"x3' STAKES PLACED 10' O.C.

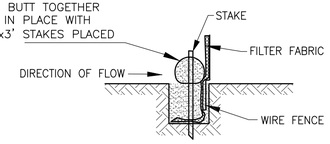

SECTION

SILT FENCE WITH SILT SOCK

NOT TO SCALE

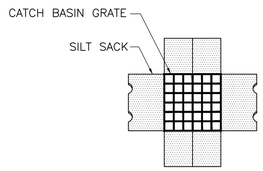

PLAN VIEW

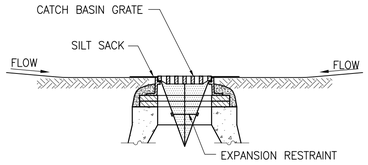

SECTION VIEW

NOTES:

1. INSTALL SILT SACK IN ALL CATCH BASINS BEFORE COMMENCING WORK OR IN PAVED AREAS AFTER BINDER COURSE IS PLACED AND STRAW BALES HAVE BEEN REMOVED. GRATE TO BE PLACED OVER SILT SACK.
2. SILT SACK SHALL BE INSPECTED PERIODICALLY AND AFTER ALL STORMS.
3. EVENTS AND CLEANING OR REPLACEMENT SHALL BE PERFORMED PROMPTLY AS NEEDED.

SILT SACK SEDIMENT TRAP

NOT TO SCALE

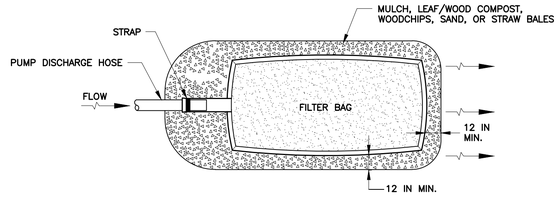

PLAN VIEW

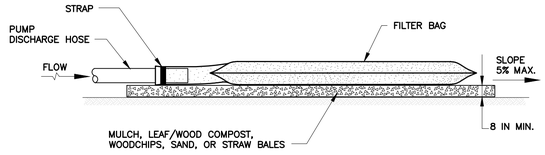

ELEVATION

CONSTRUCTION SPECIFICATIONS

1. TIGHTLY SEAL SLEEVE AROUND THE PUMP DISCHARGE HOSE WITH A STRAP OR SIMILAR DEVICE.
2. PLACE FILTER BAG ON SUITABLE BASE (E.G., MULCH, LEAF/WOOD COMPOST, WOODCHIPS, SAND, OR STRAW BALES) LOCATED ON A LEVEL OR 5% MAXIMUM SLOPING SURFACE. DISCHARGE TO A STABILIZED AREA. EXTEND BASE A MINIMUM OF 12 INCHES FROM EDGES OF BAG.
3. CONTROL PUMPING RATE TO PREVENT EXCESSIVE PRESSURE WITHIN THE FILTER BAG IN ACCORDANCE WITH THE MANUFACTURER RECOMMENDATIONS. AS THE BAG FILLS WITH SEDIMENT, REDUCE PUMPING RATE.
4. REMOVE AND PROPERLY DISPOSE OF FILTER BAG UPON COMPLETION OF PUMPING OPERATIONS OR AFTER BAG HAS REACHED CAPACITY, WHICHEVER OCCURS FIRST. SPREAD THE DEWATERED SEDIMENT FROM THE BAG IN AN APPROVED UPLAND AREA AND STABILIZE WITH SEED AND MULCH BY THE END OF THE WORK DAY. RESTORE THE SURFACE AREA BENEATH THE BAG TO ORIGINAL CONDITION UPON REMOVAL OF THE DEVICE.
5. USE NONWOVEN GEOTEXTILE WITH DOUBLE STITCHED SEAMS USING HIGH STRENGTH THREAD. SIZE SLEEVE TO ACCOMMODATE A MAXIMUM 4 INCH DIAMETER PUMP DISCHARGE HOSE. THE BAG MUST BE MANUFACTURED FROM A NONWOVEN GEOTEXTILE THAT MEETS OR EXCEEDS MINIMUM AVERAGE ROLL VALUES (MARV) FOR THE FOLLOWING:

GRAB TENSILE	250 LB	ASTM D-4632
PUNCTURE	150 LB	ASTM D-4833
FLOW RATE	70 GAL/MIN/FT^2	ASTM D-4491
PERMITTIVITY (SEC^{-1})	1.2 SEC^{-1}	ASTM D-4491
UV RESISTANCE	70% STRENGTH @ 500 HOURS	ASTM D-4355
APPARENT OPENING SIZE (AOS)	0.15-0.18 MM	ASTM D-4751
SEAM STRENGTH	90%	ASTM D-4632

6. REPLACE FILTER BAG IF BAG CLOGS OR HAS RIPS, TEARS, OR PUNCTURES. DURING OPERATION KEEP CONNECTION BETWEEN PUMP HOSE AND FILTER BAG WATER TIGHT. REPLACE BEDDING IF IT BECOMES DISPLACED.

SEDIMENTATION FILTER BAG

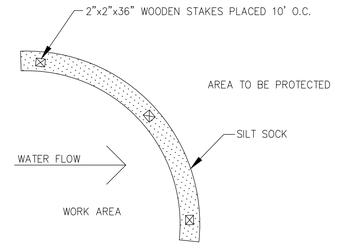

PLAN

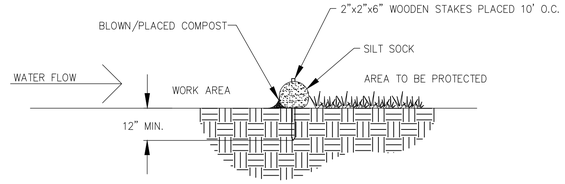

SECTION

NOTES:

1. SEE SPECIFICATIONS FOR SILT SOCK AND COMPOST FILL MATERIAL REQUIREMENTS.

COMPOST SILT SOCK

NOT TO SCALE

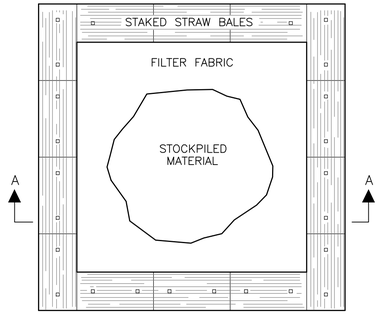

PLAN

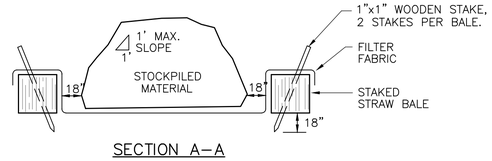

SECTION A-A

NOTE:
DIMENSIONS OF STOCKPILE AREA MAY VARY DEPENDING ON QUANTITY OF EXCAVATION. AVOID OVERTOPPING OR SLOPES IN EXCESS OF 1:1

PLAN OF TEMPORARY STOCKPILE AREA

AECOM

PROJECT

DOWNTOWN AREA COLLECTION SYSTEM AND PUMP STATIONS

CONTRACT No. 2019-02
SRF No. 4486

OWNER

TOWN OF ORLEANS, MA
19 SCHOOL ROAD
ORLEANS, MA 02653
(508) 240-3700

ENGINEER

AECOM TECHNICAL SERVICES, INC.
9 JONATHAN BOURNE DRIVE
POCASSET, MA 02559
PHONE: (508) 833-6950
www.aecom.com

REGISTRATION

COMMONWEALTH OF MASSACHUSETTS
THOMAS E. PARECE
CIVIL
No. 34463
REGISTERED PROFESSIONAL ENGINEER

ISSUE/REVISION

I/R	DATE	DESCRIPTION

PROJECT NUMBER

60587515

Designed By:	M. DONOGHUE
Drawn By:	M. CURRAN
Dept Check:	C. BENZIGER
Proj Check:	M. DONOGHUE
Date:	JANUARY 2020
Scale:	AS NOTED

DISCIPLINE

CIVIL

SHEET TITLE

DETAILS V

SHEET NUMBER

99 C-505

Last saved by: CURRANM (2020-02-04) Last Plotted: 2020-02-04
Filename: L:\WORK\60476844 - ORLEANS DOWNTOWN SEWER\SHEETS\C99 C-505.DWG

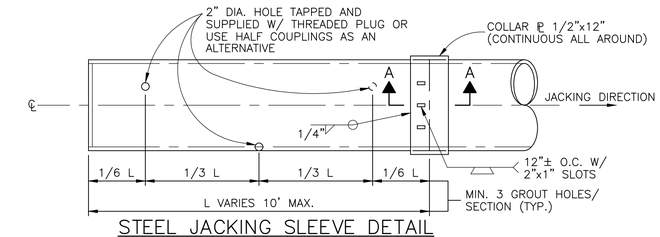

STEEL JACKING SLEEVE DETAIL

NOT TO SCALE

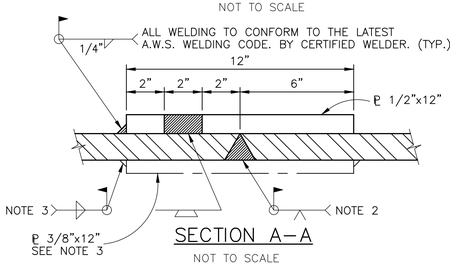

SECTION A–A

NOT TO SCALE

NOTES:
1. STEEL SLEEVE TO BE BEVELED ON THE INTERIOR OF THE PIPE.

2. THE CONTINUOUS BUTT WELD SHALL BE PERFORMED WHEN THE COMPLETE JACKING OPERATION IS FINISHED. FOR ALTERNATE TO BUTT WELDING SEE NOTE 3.

3. AS AN ALTERNATE TO NOTE 2. PROVIDE A CONTINUOUS INTERIOR ℄ 3/8"x12" WELDED ALL AROUND UPON COMPLETION OF THE JACKING OPERATION.

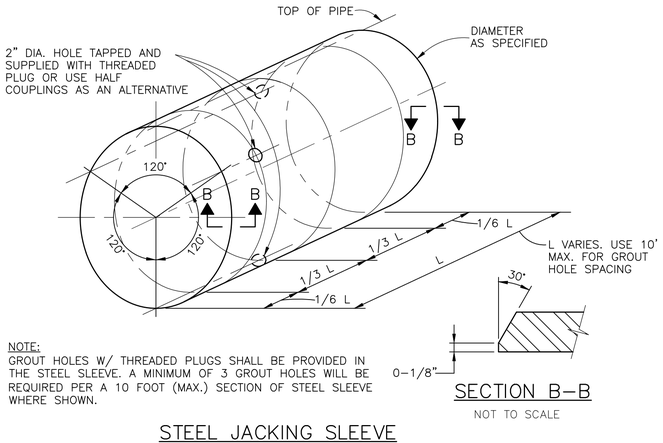

NOTE:
GROUT HOLES W/ THREADED PLUGS SHALL BE PROVIDED IN THE STEEL SLEEVE. A MINIMUM OF 3 GROUT HOLES WILL BE REQUIRED PER A 10 FOOT (MAX.) SECTION OF STEEL SLEEVE WHERE SHOWN.

SECTION B–B

NOT TO SCALE

STEEL JACKING SLEEVE

NOT TO SCALE

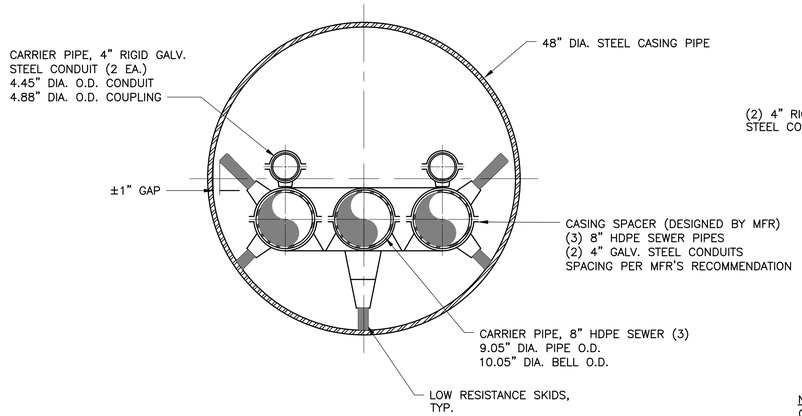

TYPICAL CARRIER PIPE SPACING DETAIL

NOT TO SCALE

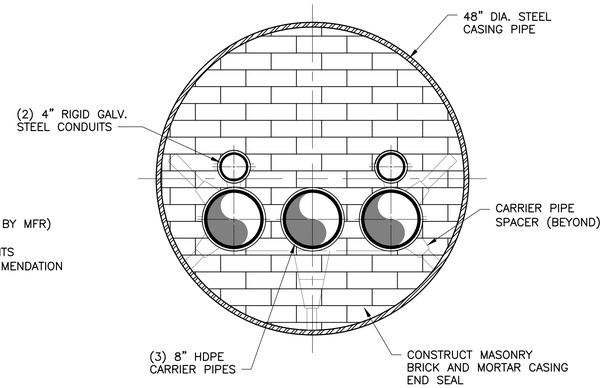

NOTE:
ONE 8" HDPE PIPE AND ONE 4" STEEL CONDUIT TO BE CAPPED AT EACH END OF THE CASING SLEEVE FOR FUTURE USE.

TYPICAL CASING SLEEVE END SEAL DETAIL

NOT TO SCALE

NOTES:

1. THE CONTRACTOR IS RESPONSIBLE TO PROTECT AND MAINTAIN THE INTEGRITY OF THE EXISTING STORMWATER INFRASTRUCTURE IN THE STATE HIGHWAY.

2. IF THE STORMWATER INFRASTRUCTURE IS IMPACTED, THE CONTRACTOR IS RESPONSIBLE FOR ALL COSTS ASSOCIATED WITH THE REPAIRS OR REPLACEMENT OF THE STORMWATER INFRASTRUCTURE.

3. ANY STORMWATER INFRASTRUCTURE REPAIRS SHALL BE AS APPROVED BY MASSDOT AND THE ENGINEER.

AECOM

PROJECT

DOWNTOWN AREA COLLECTION SYSTEM AND PUMP STATIONS

CONTRACT No. 2019-02
SRF No. 4486

OWNER

TOWN OF ORLEANS, MA

19 SCHOOL ROAD
ORLEANS, MA 02653
(508) 240-3700

ENGINEER

AECOM TECHNICAL SERVICES, INC.
9 JONATHAN BOURNE DRIVE
POCASSET, MA 02559
PHONE: (508) 833-6950
www.aecom.com

REGISTRATION



ISSUE/REVISION

I/R	DATE	DESCRIPTION

PROJECT NUMBER

60587515

Designed By:	**M. CURRAN**
Drawn By:	**M. CURRAN**
Dept Check:	**T. PARECE**
Proj Check:	**M. DONOGHUE**
Date:	**JANUARY 2020**
Scale:	**AS NOTED**

DISCIPLINE

CIVIL

SHEET TITLE

DETAILS VI

SHEET NUMBER

99 C-506

Last saved by: CURRANM(2020-02-04) Last Plotted: 2020-02-04
Filename: L:\WORK\60476644 - ORLEANS DOWNTOWN SEWER\SHEETS\C\99 C-506.DWG

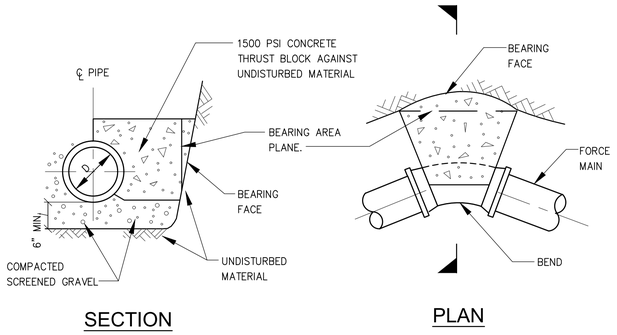

SECTION PLAN

NOTES:
1. WHERE SO INDICATED ON PLANS, THE FORCE MAIN BENDS SHALL BE BACKED UP WITH A CONCRETE THRUST BLOCK BETWEEN THE PIPE AND UNDISTURBED MATERIAL.
2. REQUIRED BEARING AREA TO BE CALCULATED ON VERTICAL PLANE 90 DEG. TO RADIAL PLANE PASSING THROUGH MIDPOINT OF BEND.
3. MINIMUM BEARING AREA: 2.0 SQ.FT.
4. SEE PLANS FOR REQUIRED BEARING AREAS GREATER THAN MINIMUM.

FORCE MAIN THRUST BLOCK
NOT TO SCALE

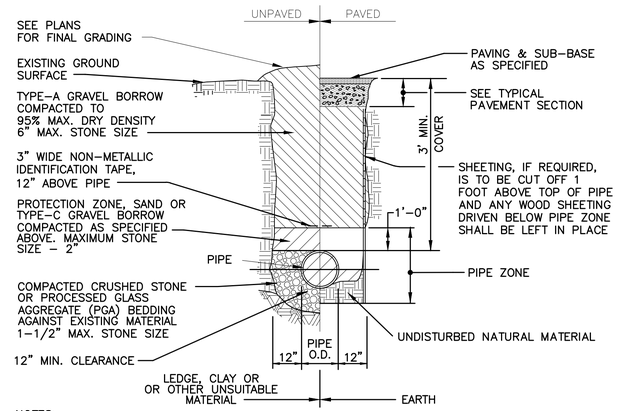

NOTES:
1. GRAVEL BORROW SHALL CONFORM TO MASS HIGHWAY SPECIFICATION M1.03.0
2. CRUSHED STONE BEDDING SHALL CONFORM TO MASS HIGHWAY SPECIFICATION M2.01.1

TYPICAL H.D.P.E. DRAIN TRENCH DETAIL
NOT TO SCALE

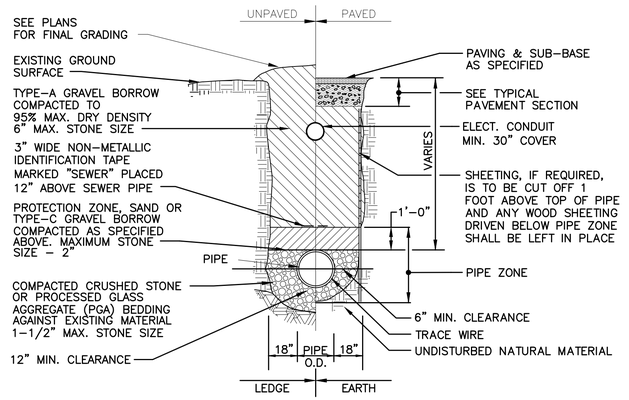

NOTES:
1. GRAVEL BORROW SHALL CONFORM TO MASS HIGHWAY SPECIFICATION M1.03.0
2. CRUSHED STONE BEDDING SHALL CONFORM TO MASS HIGHWAY SPECIFICATION M2.01.1

GRAVITY SEWER/FORCE MAIN/ ELECT. CONDUIT TRENCH DETAIL
NOT TO SCALE

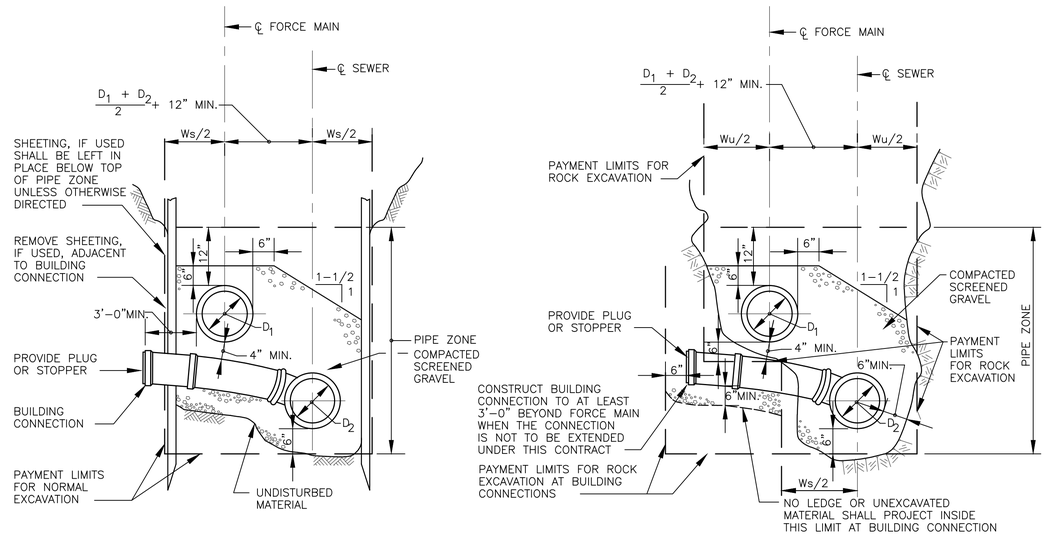

TRENCH SECTIONS FOR SEWER AND FORCE MAIN IN SAME TRENCH
NOT TO SCALE

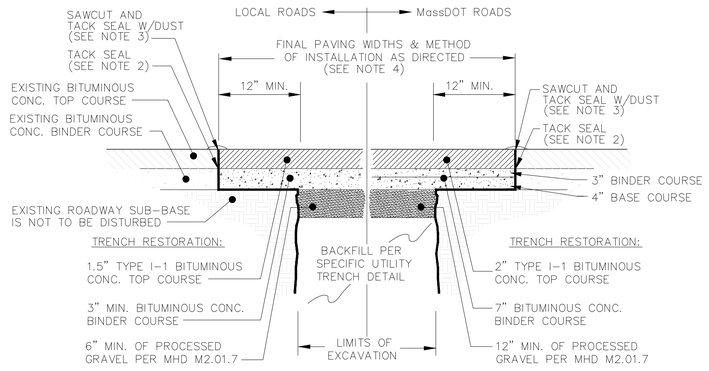

1. ALL INSTALLATION AND MATERIAL SPECIFICATIONS PER MASS. HIGHWAY DEPARTMENT STANDARD SPECIFICATIONS FOR HIGHWAYS AND BRIDGES, 1988 AS AMENDED.
2. ALL EXPOSED BITUMINOUS CONCRETE IS TO BE TACKED PER MHD PRIOR TO NEW BITUMINOUS CONCRETE INSTALLATION.
3. ALL EXPOSED JOINTS ARE TO BE SEALED WITH TACK AND STONE DUST.
4. ANY TOP COURSE APPLIED AT A WIDTH OF 6' WIDE OR GREATER IS TO BE PLACED BY MACHINE/BOX SPREADER WHEN & AS DIRECTED BY THE TOWN OF ORLEANS.

TYPICAL TRENCH REPAIR & PAVEMENT SECTION DETAIL
NOT TO SCALE

AECOM

PROJECT

DOWNTOWN AREA COLLECTION SYSTEM AND PUMP STATIONS

CONTRACT No. 2019-02
SRF No. 4486

OWNER

TOWN OF ORLEANS, MA
19 SCHOOL ROAD
ORLEANS, MA 02653
(508) 240-3700

ENGINEER

AECOM TECHNICAL SERVICES, INC.
9 JONATHAN BOURNE DRIVE
POCASSET, MA 02559
PHONE: (508) 833-6950
www.aecom.com

REGISTRATION

COMMONWEALTH OF MASSACHUSETTS
THOMAS E. PARECE
CIVIL
No. 34483
REGISTERED PROFESSIONAL ENGINEER
5/19/2020

ISSUE/REVISION

I/R	DATE	DESCRIPTION

PROJECT NUMBER

60587515

Designed By:	T. LAFFER
Drawn By:	S. NAPOLITANO
Dept Check:	C.BENZIGER
Proj Check:	M. DONOGHUE
Date:	JANUARY 2020
Scale:	AS NOTED

DISCIPLINE

CIVIL

SHEET TITLE

DETAILS VII

SHEET NUMBER

99 C-507

Last saved by: CURRANM(2020-02-04) Last Plotted: 2020-02-04
Filename: L:\WORK\60476644 - ORLEANS DOWNTOWN SEWER\SHEETS\C\99 C-507.DWG

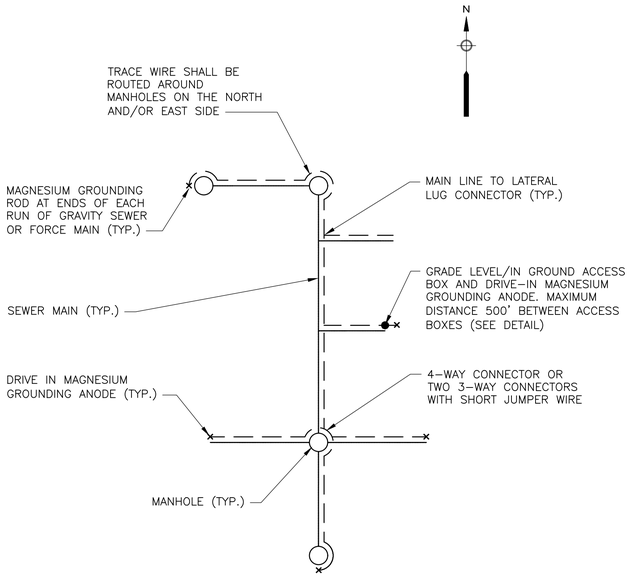

NOTES:
1. WIRE SHOWN AWAY FROM PIPE FOR CLARITY. WIRE SHALL BE INSTALLED ON THE SIDE OF THE PIPE. THE WIRE SHALL BE FASTENED TO THE PIPE WITH TAPE OR PLASTIC TIES AT 5' INTERVALS.

TRACER WIRE PLAN
NOT TO SCALE

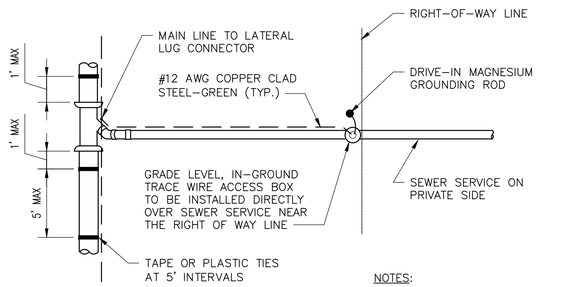

NOTES:
1. MAXIMUM DISTANCE OF 500' BETWEEN ACCESS BOXES.

PLAN

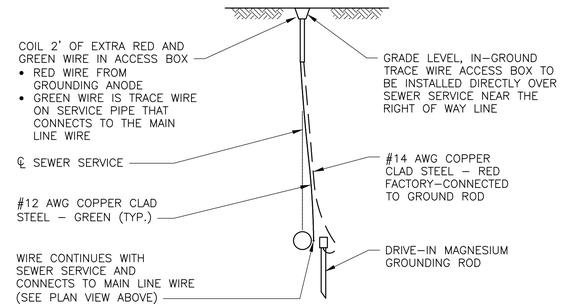

SECTION

TRACER WIRE ACCESS BOX
NOT TO SCALE

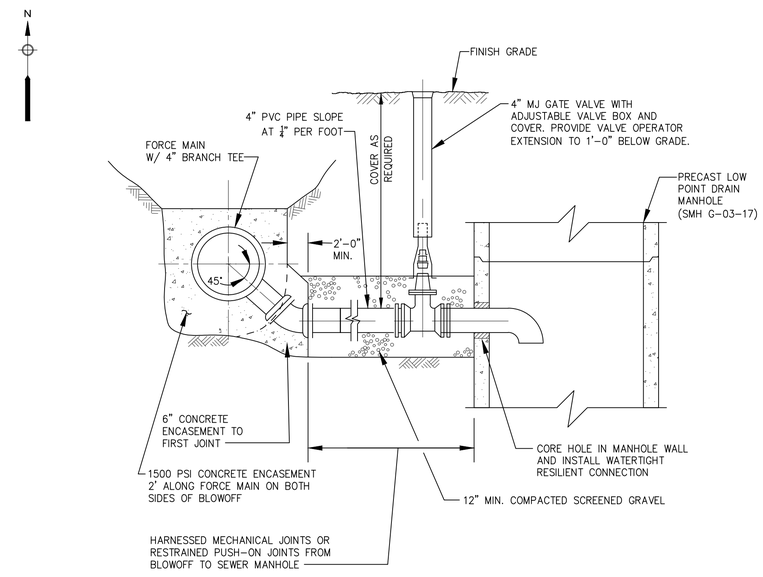

SECTION

TYPICAL FORCE MAIN BLOW-OFF CONNECTION BELOW INVERT OF FORCE MAIN
NOT TO SCALE

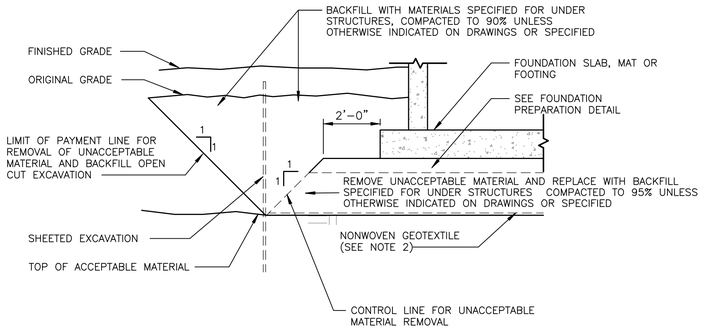

NOTES:
1. PERCENT COMPACTION IS THE RATIO OF FIELD DRY DENSITY DETERMINED BY ASTM D-1557 MULTIPLIED BY 100.
2. NONWOVEN GEOTEXTILE SHALL BE PLACED AT UNDISTURBED SUBGRADE WHEN SCREENED GRAVEL OR CRUSHED STONE IS USED AS BACKFILL BENEATH STRUCTURES.

REMOVAL OF UNACCEPTABLE MATERIAL FROM BENEATH STRUCTURES
N.T.S.

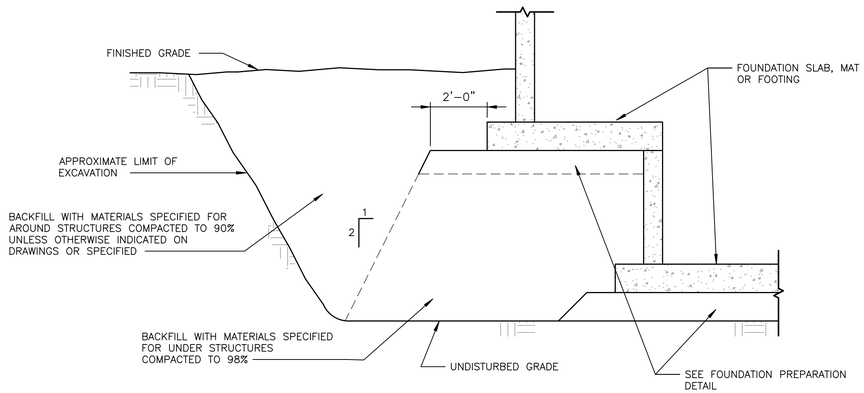

NOTES:
1. PERCENT COMPACTION IS THE RATIO OF FIELD DRY DENSITY DETERMINED BY ASTM D-6938 OR D-1556 TO MAXIMUM DRY DENSITY DETERMINED BY ASTM D-1557 MULTIPLIED BY 100.

BACKFILL AROUND AND BENEATH STRUCTURES
N.T.S.

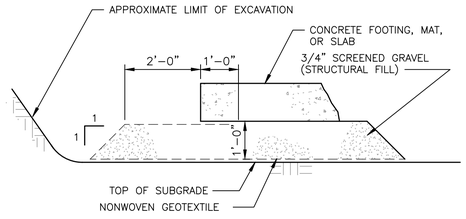

SIEVE SIZE	PERCENTAGE BY WEIGHT PASSING 3/4" SCREENED GRAVEL
1"	100
3/4"	90-100
3/8"	20-55
#4	0-10
#8	0-5

NOTE: CONFORM TO GEOTEXTILE SPECFICATIONS

FOUNDATION PREPARATION WITH GEOTEXTILE
N.T.S.

AECOM

PROJECT

DOWNTOWN AREA COLLECTION SYSTEM AND PUMP STATIONS

CONTRACT No. 2019-02
SRF No. 4486

OWNER

TOWN OF ORLEANS, MA
19 SCHOOL ROAD
ORLEANS, MA 02653
(508) 240-3700

ENGINEER

AECOM TECHNICAL SERVICES, INC.
9 JONATHAN BOURNE DRIVE
POCASSET, MA 02559
PHONE: (508) 833-6950
www.aecom.com

REGISTRATION



ISSUE/REVISION

I/R	DATE	DESCRIPTION

PROJECT NUMBER

60587515

Designed By:	M. DONOGHUE
Drawn By:	M. CURRAN
Dept Check:	C. BENZIGER
Proj Check:	M. DONOGHUE
Date:	JANUARY 2020
Scale:	AS NOTED

DISCIPLINE

CIVIL

SHEET TITLE

DETAILS VIII

SHEET NUMBER

99 C-508

Last saved by: CURRANM(2020-02-04) Last Plotted: 2020-02-04
Filename: L:\WORK\60476644 - ORLEANS DOWNTOWN SEWER\SHEETS\C\99 C-508.DWG

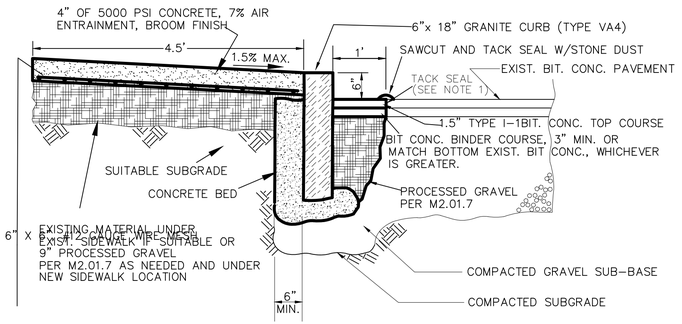

1. ALL EXPOSED BITUMINOUS CONCRETE IS TO BE TACKED PER MHD PRIOR TO NEW BITUMINOUS CONCRETE INSTALLATION.

CONCRETE SIDEWALK & GRANITE CURB DETAIL

NOT TO SCALE

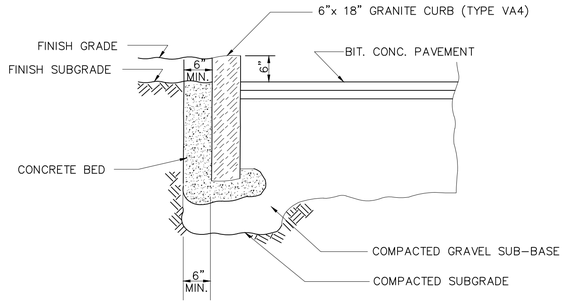

GRANITE CURB DETAIL

NOT TO SCALE

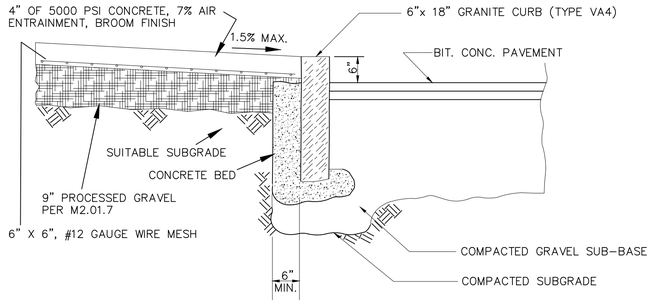

CONCRETE SIDEWALK & GRANITE CURB DETAIL

NOT TO SCALE

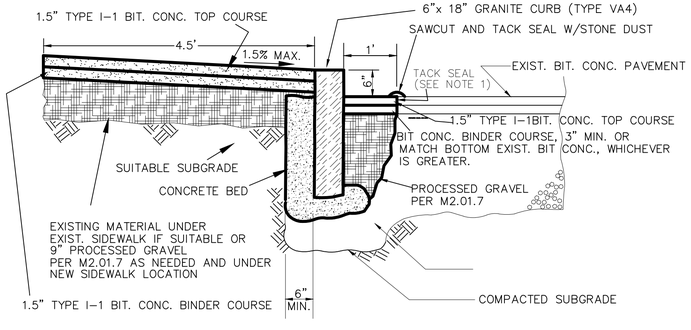

1. ALL EXPOSED BITUMINOUS CONCRETE IS TO BE TACKED PER MHD PRIOR TO NEW BITUMINOUS CONCRETE INSTALLATION.

BITUMINOUS CONCRETE SIDEWALK & GRANITE CURB DETAIL

NOT TO SCALE

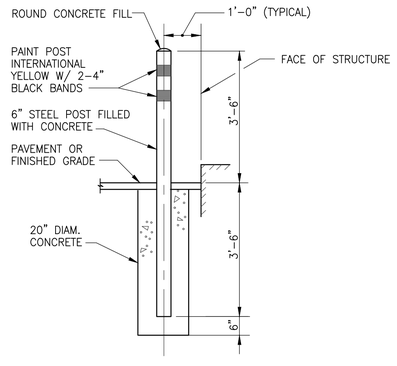

GUARD POST

NOT TO SCALE

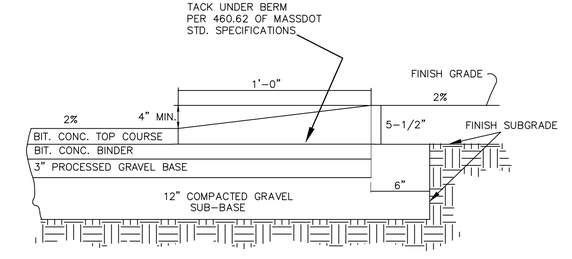

CAPE COD BERM

NOT TO SCALE

AECOM

PROJECT

DOWNTOWN AREA COLLECTION SYSTEM AND PUMP STATIONS

CONTRACT No. 2019-02
SRF No. 4486

OWNER

TOWN OF ORLEANS, MA
19 SCHOOL ROAD
ORLEANS, MA 02653
(508) 240-3700

ENGINEER

AECOM TECHNICAL SERVICES, INC.
9 JONATHAN BOURNE DRIVE
POCASSET, MA 02559
PHONE: (508) 833-6950
www.aecom.com

REGISTRATION

COMMONWEALTH OF MASSACHUSETTS
THOMAS E. PARECE
CIVIL
No. 34483
REGISTERED PROFESSIONAL ENGINEER
12/10/2020

ISSUE/REVISION

I/R	DATE	DESCRIPTION

PROJECT NUMBER

60587515

Designed By:	M. DONOGHUE
Drawn By:	M. CURRAN
Dept Check:	C. BENZIGER
Proj Check:	M. DONOGHUE
Date:	JANUARY 2020
Scale:	AS NOTED

DISCIPLINE

CIVIL

SHEET TITLE

DETAILS IX

SHEET NUMBER

99 C-509

Last saved by: CURRANM(2020-02-04) Last Plotted: 2020-02-04
Filename: L:\WORK\60476644 - ORLEANS DOWNTOWN SEWERSHEETS\C\99 C-509.DWG

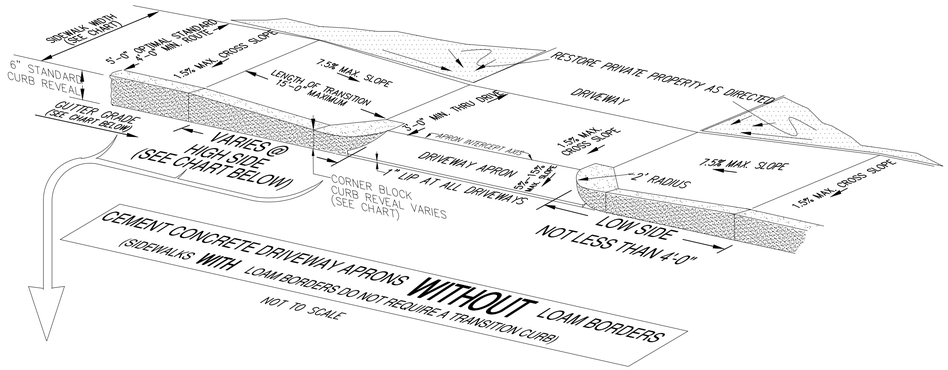

ORDER OF OPERATIONS FOR ALL DRIVEWAY ZONE INSTALLATIONS

1. DETERMINE SIDEWALK WIDTH.
2. SET THE CORNER BLOCK REVEAL TO THE DIMENSIONS SHOWN ON THE CHART BELOW AND INSTALL THE TRANSITION CURB.
3. LOCATE THE INTERCEPT AXIS AND RE-CHECK FOR THE MINIMUM ACCESSIBLE ROUTE WIDTH.
4. SET THE 1.5% GRADIENT TO THE BACK OF THE WALK WITH A 2' SMART LEVEL' AND RIGID STRAIGHTEDGE.
5. FINE GRADE THE APRON AREA WHILE MAINTAINING THE INTERCEPT AXIS AND BACK OF SIDEWALK GRADE POINTS.
6. CHECK THE FORMS, HOWEVER, THE CONTRACTOR MUST USE A 2' SMART LEVEL' DURING ALL OPERATIONS TO ENSURE THAT THE FINAL LINE AND GRADE COMPLIES WITH THE NOTED DIMENSIONS AND/OR GRADIENTS.
7. DURING THE FINISHING OPERATIONS OF THE CEMENT CONCRETE, THE CONTRACTOR IS TO CHECK THE FINAL PRODUCT(S) TO ENSURE CONTINUED COMPLIANCE WITH THE NOTED STANDARDS.

IMPORTANT NOTE (APPLICABLE TO ALL CURB, DRIVEWAY & RAMP SYSTEMS)

ALL DIMENSIONAL INFORMATION IS FOR GUIDELINE PURPOSES ONLY. THE FINAL PRODUCT(S) MUST COMPLY WITH ALL (2' 'SMART LEVEL') GRADIENTS & ACCESS ROUTE CRITERIA PER THE RULES & REGULATIONS OF THE MASSACHUSETTS ARCHITECTURAL ACCESS BOARD AND THE AMERICANS WITH DISABILITIES ACT.

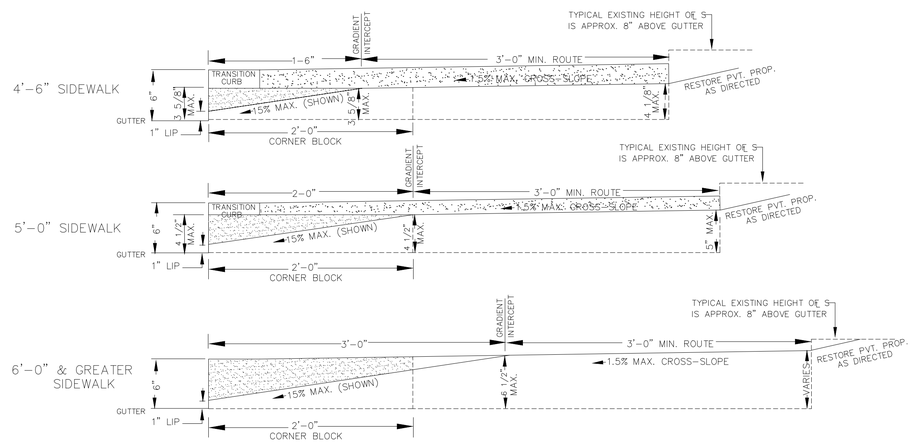

SECTION VIEW FOR THE VARIOUS WIDTHS OF DRIVEWAY APRONS
NOT TO SCALE

DRIVEWAY TRANSITIONS TO INTERCEPT 6" STD. CURB REVEAL (TARGET VALUES ONLY) ①

WALK WIDTH	CORNER BLOCK REVEAL	DISTANCE TO APRON INTERCEPT	RISE TO APRON INTERCEPT	GUTTER GRADE % ②	HIGH SIDE LENGTH OF TRANSITION CURB INCLUDING THE 2' RADIUS COR. BLK. ③ ④
4'-6"	3 5/8" MAX.	1'-6" FIXED	3 5/8" MAX.	UP TO .5	4'-0"
				1	4'-0"
				2	4'-0"
				3	5'-0"
				4	6'-0"
				5	8'-0"
				6	13'-6"
				7 & GREATER	15'-0" MAX.
5'-0"	4 1/2" MAX.	2'-0" FIXED	4 1/2" MAX.	0-.5	4'-0"
				1	4'-0"
				2	4'-0"
				3	4'-0"
				4	4'-0"
				5	5'-6"
				6	8'-6"
				7 & GREATER	15'-0" MAX.
6'-0" & GREATER	6" STANDARD	3'-0" FIXED	6 1/2" MAX.	ALL GRADES	NO TRANSITIONS

1. FINAL PRODUCT(S) MUST NOT EXCEED THE 7.5% GRADIENT OR 1.5% CROSS SLOPE STANDARDS.
2. WHEN THE FACTOR FALLS BETWEEN THE LISTED RANGE, USE THE LESSER GRADIENT FACTOR.
3. THE MAXIMUM REQUIRED TRANSITION LENGTH OF CURB IS 15'-0"
4. SIDEWALKS WITH LOAM BORDERS DO NOT REQUIRE TRANSITION CURBS.

DRIVEWAY APRONS
NOT TO SCALE

AECOM

PROJECT

DOWNTOWN AREA COLLECTION SYSTEM AND PUMP STATIONS

CONTRACT No. 2019-02
SRF No. 4486

OWNER

TOWN OF ORLEANS, MA
19 SCHOOL ROAD
ORLEANS, MA 02653
(508) 240-3700

ENGINEER

AECOM TECHNICAL SERVICES, INC.
9 JONATHAN BOURNE DRIVE
POCASSET, MA 02559
PHONE: (508) 833-6950
www.aecom.com

REGISTRATION

COMMONWEALTH OF MASSACHUSETTS
THOMAS E. PARECE
CIVIL
No. 34493
REGISTERED
PROFESSIONAL ENGINEER
9/4/2020

ISSUE/REVISION

I/R	DATE	DESCRIPTION

PROJECT NUMBER

60587515

Designed By:	M. DONOGHUE
Drawn By:	M. CURRAN
Dept Check:	C. BENZIGER
Proj Check:	M. DONOGHUE
Date:	JANUARY 2020
Scale:	AS NOTED

DISCIPLINE

CIVIL

SHEET TITLE

DETAILS X

SHEET NUMBER

99 C-510

Last saved by: CURRANM(2020-02-04) Last Plotted: 2020-02-04
Filename: L:\WORK\60476644 - ORLEANS DOWNTOWN SEWER\SHEETS\C\99 C-510.DWG

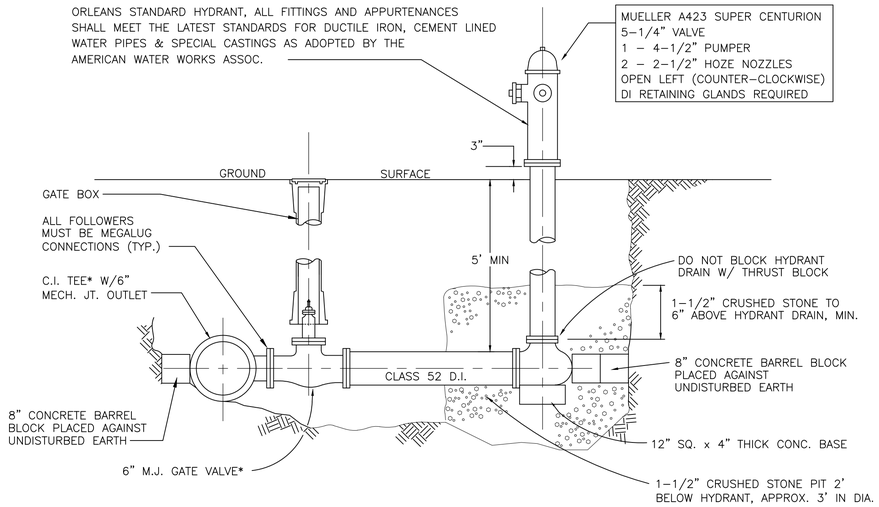

STANDARD HYDRANT DETAIL

(NOT TO SCALE)

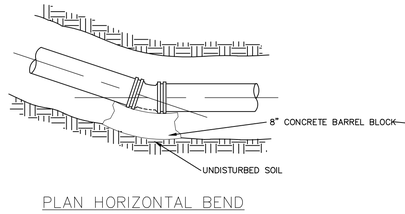

PLAN HORIZONTAL BEND

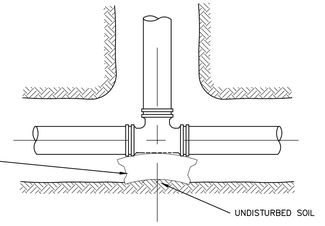

PLAN TEE

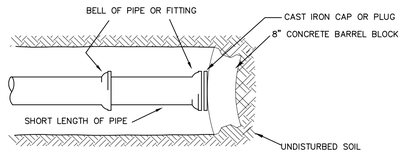

PLAN PLUG END OF LINE

THRUST BLOCK REQUIREMENTS	
FITTING	MIN BEARING AREA (SF)
8"X 1/8 BEND	12
12"X 8" TEE	12
10"X 8" TEE	10
8"X 8" TEE	9
8"X 6" TEE	5
8" CAP / PLUG	12
12"X 8" REDUCER	8
10"X 8" REDUCER	6
8" X 6" REDUCER	4
8" 22 1/2"* & 45* BENDS	8
ALL TEES AND VALVES	10
HYDRANTS	9

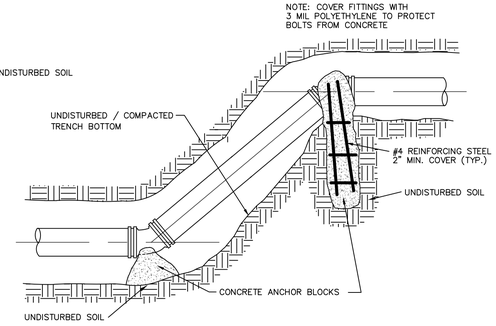

ELEVATION - VERTICAL BENDS

WATER MAIN ANCHORAGE DETAILS

NOT TO SCALE

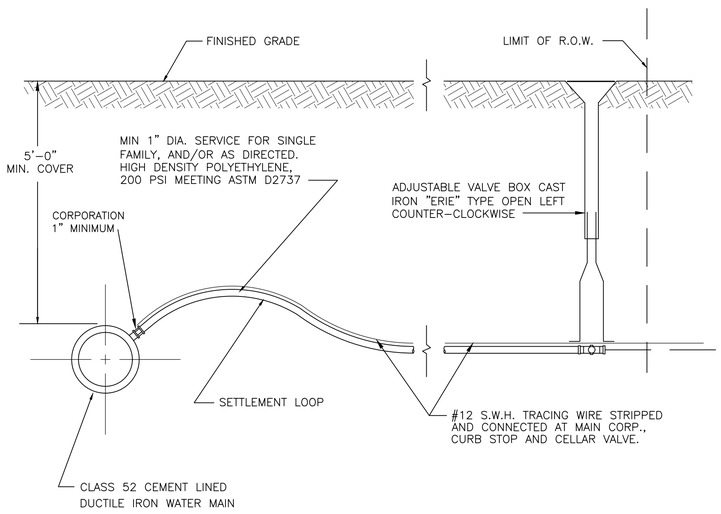

TYPICAL PERMANENT SERVICE CONNECTION

NOT TO SCALE

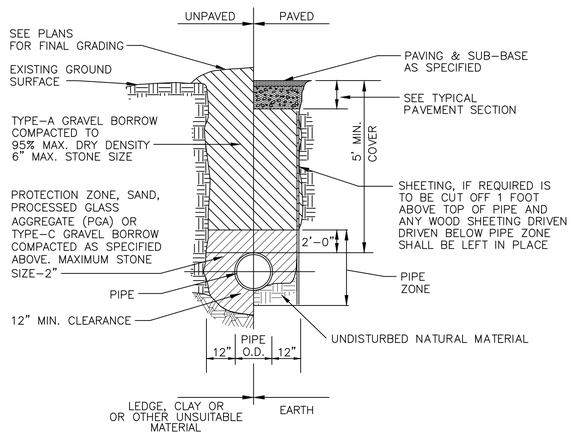

1. GRAVEL BORROW SHALL CONFORM TO MASS HIGHWAY SPECIFICATION M1.03.0
2. CRUSHED STONE BEDDING SHALL CONFORM TO MASS HIGHWAY SPECIFICATION M2.01.1

TYPICAL WATER TRENCH DETAIL

NOT TO SCALE

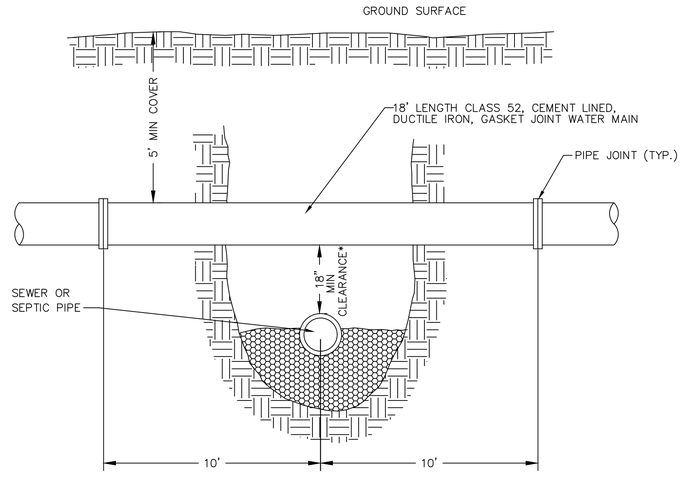

* WHEN THE CROSSING AS SHOWN IS LESS THAN 18" VERTICAL CLEARANCE THE UTILITY BEING INSTALLED MUST BE SLEEVED 10' ON BOTH SIDES OF THE CROSSING WITH SDR35 PVC PIPE. IF THE SEWER MAIN OR SERVICE CROSSES ABOVE THE WATERMAIN OR SERVICE, AGAIN THE UTILITY BEING INSTALLED MUST BE SLEEVED 10' ON BOTH SIDES OF THE CROSSING WITH SDR35 PVC PIPE. SEAL ENDS OF SER35 PVC WITH CONCRETE

TYPICAL WATER CROSSING

NOT TO SCALE

AECOM

PROJECT

DOWNTOWN AREA COLLECTION SYSTEM AND PUMP STATIONS

CONTRACT No. 2019-02
SRF No. 4486

OWNER

TOWN OF ORLEANS, MA

19 SCHOOL ROAD
ORLEANS, MA 02653
(508) 240-3700

ENGINEER

AECOM TECHNICAL SERVICES, INC.
9 JONATHAN BOURNE DRIVE
POCASSET, MA 02559
PHONE: (508) 833-6950
www.aecom.com

REGISTRATION



ISSUE/REVISION

I/R	DATE	DESCRIPTION

PROJECT NUMBER

60587515

Designed By:	--
Drawn By:	--
Dept Check:	--
Proj Check:	M. DONOGHUE
Date:	JANUARY 2020
Scale:	AS NOTED

DISCIPLINE

CIVIL

SHEET TITLE

DETAILS XI

SHEET NUMBER

99 C-511

Last saved by: CURRANM(2020-02-04) Last Plotted: 2020-02-04
Filename: L:\WORK\60476644 - ORLEANS DOWNTOWN SEWER\SHEETS\C\99 C-511.DWG

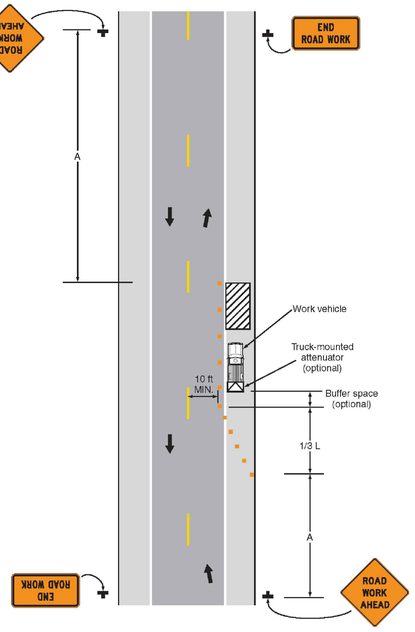

TYPICAL APPLICATION 6

SHOULDER WORK WITH MINOR ENCROACHMENT

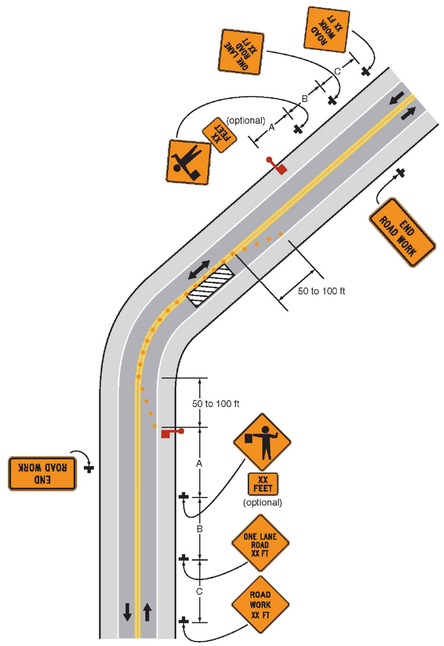

TYPICAL APPLICATION 10

LANE CLOSURE ON A TWO-LANE ROAD USING FLAGGERS

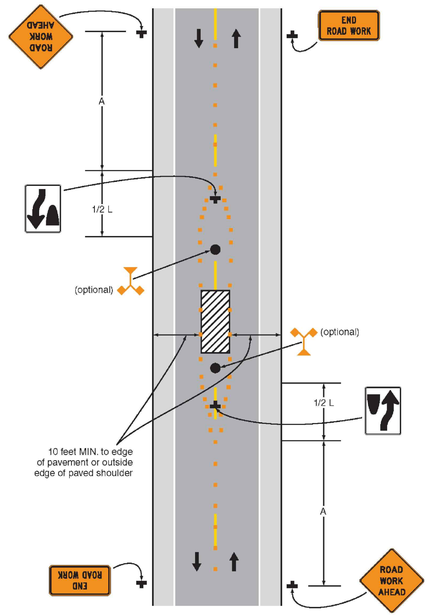

TYPICAL APPLICATION 15

WORK IN THE CENTER OF A ROAD WITH LOW TRAFFIC VOLUMES

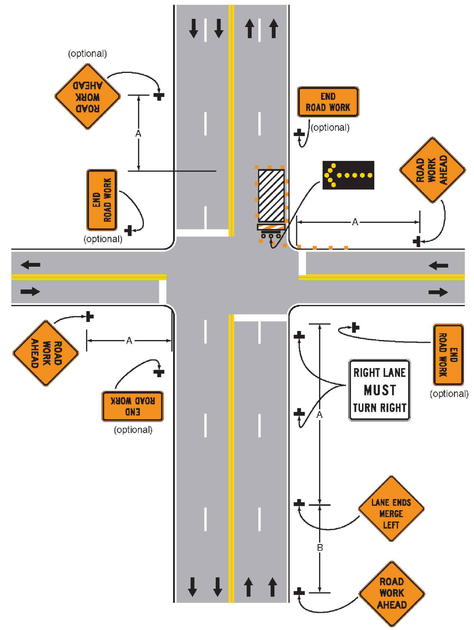

TYPICAL APPLICATION 22

RIGHT-HAND LANE CLOSURE ON THE FAR SIDE OF AN INTERSECTION

NOTES:

1. SEE SHEET 99 C-603 FOR TEMPORARY SIGN SUMMARY AND MEANING OF SYMBOLS AND/OR LETTER CODES.

Last saved by: CURRANM(2020-01-17) Last Plotted: 2020-02-04
Filename: L:\WORK\60476844 - ORLEANS DOWNTOWN SEWER\SHEETS\C\99 C-601.DWG

AECOM

PROJECT

DOWNTOWN AREA COLLECTION SYSTEM AND PUMP STATIONS

CONTRACT No. 2019-02
SRF No. 4486

OWNER

TOWN OF ORLEANS, MA
19 SCHOOL ROAD
ORLEANS, MA 02653
(508) 240-3700

ENGINEER

AECOM TECHNICAL SERVICES, INC.
9 JONATHAN BOURNE DRIVE
POCASSET, MA 02559
PHONE: (508) 833-6950
www.aecom.com

REGISTRATION

COMMONWEALTH OF MASSACHUSETTS
THOMAS E. PARECE
CIVIL
No. 34483
REGISTERED PROFESSIONAL ENGINEER
01/17/2020

ISSUE/REVISION

I/R	DATE	DESCRIPTION

PROJECT NUMBER

60587515

Designed By:	M. CURRAN
Drawn By:	M. CURRAN
Dept Check:	T. PARECE
Proj Check:	M. DONOGHUE
Date:	JANUARY 2020
Scale:	AS NOTED

DISCIPLINE

SHEET TITLE

TRAFFIC MANAGEMENT TYPICAL APPLICATIONS I

SHEET NUMBER

99 C-601

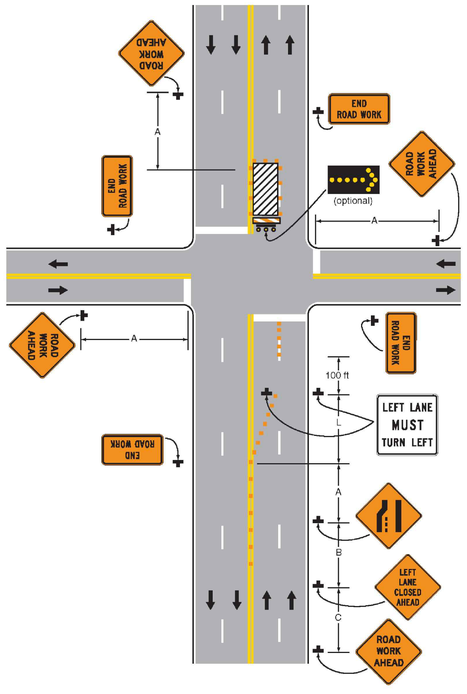

TYPICAL APPLICATION 23

LEFT–HAND LANE CLOSURE ON THE FAR SIDE OF AN INTERSECTION

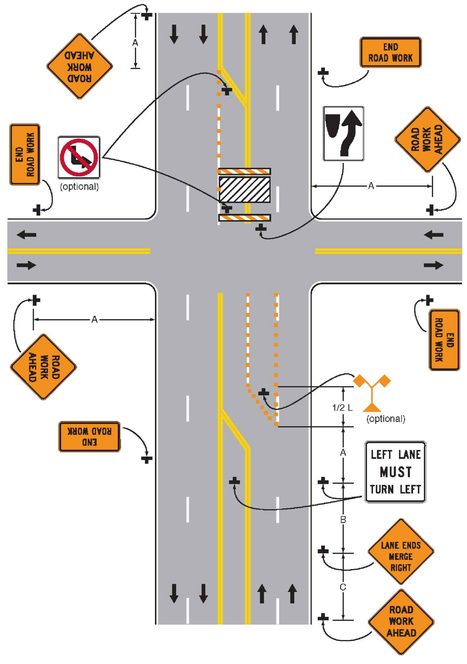

TYPICAL APPLICATION 25

MULTIPLE LANE CLOSURES AT AN INTERSECTION

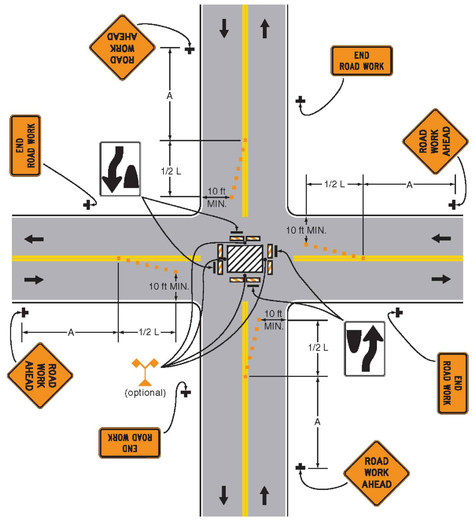

TYPICAL APPLICATION 26

CLOSURE IN THE CENTER OF AN INTERSECTION

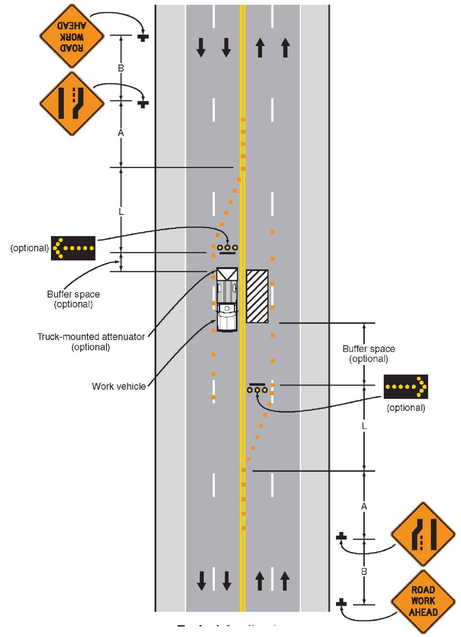

TYPICAL APPLICATION 30

INTERIOR LANE CLOSURE ON A MULTI–LANE STREET

NOTES:

1. SEE SHEET 99 C-603 FOR TEMPORARY SIGN SUMMARY AND MEANING OF SYMBOLS AND/OR LETTER CODES.

Last saved by: CURRANM(2020-01-17) Last Plotted: 2020-02-04
Filename: L:\WORK\60476644 - ORLEANS DOWNTOWN SEWER\SHEETS\C\99 C-602.DWG

AECOM

PROJECT

DOWNTOWN AREA COLLECTION SYSTEM AND PUMP STATIONS

CONTRACT No. 2019-02
SRF No. 4486

OWNER

TOWN OF ORLEANS, MA

19 SCHOOL ROAD
ORLEANS, MA 02653
(508) 240-3700

ENGINEER

AECOM TECHNICAL SERVICES, INC.
9 JONATHAN BOURNE DRIVE
POCASSET, MA 02559
PHONE: (508) 833-6950
www.aecom.com

REGISTRATION

COMMONWEALTH OF MASSACHUSETTS
THOMAS E. PARECE
CIVIL
No. 34463
REGISTERED PROFESSIONAL ENGINEER

ISSUE/REVISION

I/R	DATE	DESCRIPTION

PROJECT NUMBER

60587515

Designed By:	**M. CURRAN**
Drawn By:	**M. CURRAN**
Dept Check:	**T. PARECE**
Proj Check:	**M. DONOGHUE**
Date:	**JANUARY 2020**
Scale:	**AS NOTED**

DISCIPLINE

CIVIL

SHEET TITLE

TRAFFIC MANAGEMENT TYPICAL APPLICATIONS II

SHEET NUMBER

99 C-602

MEANING OF LETTER CODES ON TYPICAL APPLICATION DIAGRAMS

ROAD TYPE	DISTANCE BETWEEN SIGNS**		
	A	B	C
URBAN (LOW SPEED)*	100 ft	100 ft	100 ft
URBAN (HIGH SPEED)*	350 ft	350 ft	350 ft
RURAL	500 ft	500 ft	500 ft
EXPRESSWAY/FREEWAY	1,000 ft	1,500 ft	2,640 ft

NOTES:

* SPEED CATEGORY TO BE DETERMINED BY HIGHWAY AGENCY.

** DISTANCES ARE SHOWN IN FEET. THE COLUMN HEADINGS A, B AND C ARE THE DIMENSIONS SHOWN ON SHEET 99 C-601 AND 99 C-602.

- THE A DIMENSION IS THE DISTANCE FROM THE TRANSITION OR POINT OF RESTRICTION TO THE FIRST SIGN.
- THE B DIMENSION IS THE DISTANCE BETWEEN THE FIRST AND SECOND SIGNS.
- THE C DIMENSION IS THE DISTANCE BETWEEN THE SECOND AND THIRD SIGNS. (THE THIRD SIGN IS THE FIRST ONE IN A THREE-SIGN SERIES ENCOUNTERED BY A DRIVER APPROACHING A TEMPORARY TRAFFIC CONTROL ZONE.)

FORMULAS FOR L ARE AS FOLLOWS:

FOR SPEED LIMITS OF 40 mph OR LESS:

$$L = \frac{WS^2}{60}$$

FOR SPEED LIMITS OF 45 mph OR GREATER:

WHERE: L = TAPER LENGTH IN FEET

W = WIDTH OF OFFSET IN FEET

S = POSTED SPEED LIMIT, OR OFF-PEAK 85th-PERCENTILE SPEED PRIOR TO WORK STARTING, OR THE ANTICIPATED OPERATING SPEED IN mph

TEMPORARY SIGN SUMMARY

IDENTIFICATION NUMBER	SIZE OF SIGN W	SIZE OF SIGN H	TEXT	TEXT DIMENSIONS	COLOR/ LEGEND	NUMBER OF SIGNS REQUIRED*
G20-2	36"	18"	END ROAD WORK	SEE MUTCD STANDARDS	ORANGE	2
R4-7	24"	30"		SEE MUTCD STANDARDS	WHITE	2
W4-2	36"	36"		SEE MUTCD STANDARDS	ORANGE	1
W9-2	36"	36"	LANE ENDS MERGE LEFT	SEE MUTCD STANDARDS	ORANGE	1
W20-5	36"	36"	RIGHT LANE CLOSED 1/2 MILE	SEE MUTCD STANDARDS	ORANGE	1
W20-3	36"	36"	ROAD WORK AHEAD	SEE MUTCD STANDARDS	ORANGE	2
W20-4	36"	36"	ONE LANE ROAD XXFT	SEE MUTCD STANDARDS	ORANGE	2
W20-7a	36"	36"	XX FEET	SEE MUTCD STANDARDS	ORANGE	2

* NUMBER OF SIGNS REQUIRED BASED ON ONE CREW WORKING. ADDITIONAL SIGNS MAY BE NECESSARY FOR MULTIPLE CREWS

MEANINGS OF SYMBOLS ON TYPICAL APPLICATION DIAGRAMS

- WORK SPACE
- HIGH-LEVEL WARNING DEVICE (FLAG TREE)
- DIRECTION OF TRAFFIC
- POLICE OFFICER
- TYPE III BARRICADE
- CHANNELIZING DEVICE
- SIGN (SHOWN FACING LEFT)
- ARROW BOARD

AECOM

PROJECT

DOWNTOWN AREA COLLECTION SYSTEM AND PUMP STATIONS

CONTRACT No. 2019-02
SRF No. 4486

OWNER

TOWN OF ORLEANS, MA
19 SCHOOL ROAD
ORLEANS, MA 02653
(508) 240-3700

ENGINEER

AECOM TECHNICAL SERVICES, INC.
9 JONATHAN BOURNE DRIVE
POCASSET, MA 02559
PHONE: (508) 833-6950
www.aecom.com

REGISTRATION

COMMONWEALTH OF MASSACHUSETTS
THOMAS E. PARECE
CIVIL
No. 34463
REGISTERED PROFESSIONAL ENGINEER

ISSUE/REVISION

I/R	DATE	DESCRIPTION

PROJECT NUMBER

60587515

Designed By:	M. CURRAN
Drawn By:	M. CURRAN
Dept Check:	T. PARECE
Proj Check:	M. DONOGHUE
Date:	JANUARY 2020
Scale:	AS NOTED

DISCIPLINE

CIVIL

SHEET TITLE

TRAFFIC MANAGEMENT DETAILS & TEMPORARY SIGN SUMMARY

SHEET NUMBER

99 C-603

Last saved by: CURRANM(2020-01-17) Last Plotted: 2020-02-04
Filename: L:\WORK\60476844 - ORLEANS DOWNTOWN SEWER\SHEETS\C\99 C-603.DWG

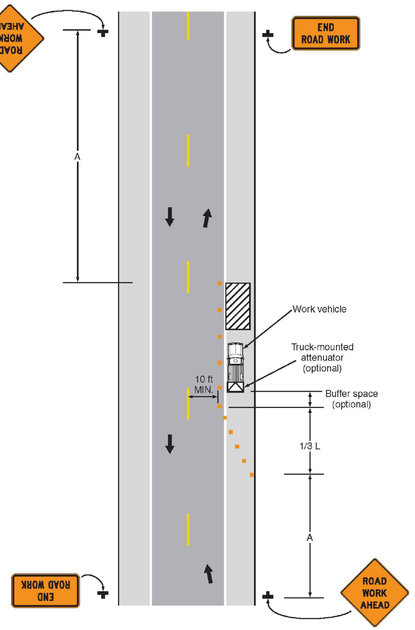

TYPICAL APPLICATION 6

SHOULDER WORK WITH MINOR ENCROACHMENT

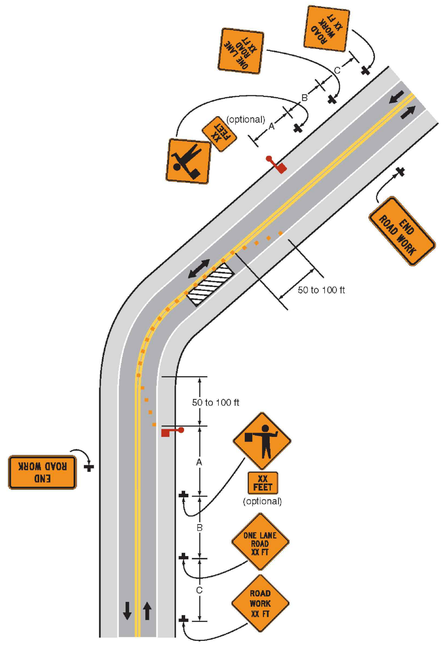

TYPICAL APPLICATION 10

LANE CLOSURE ON A TWO-LANE ROAD USING FLAGGERS

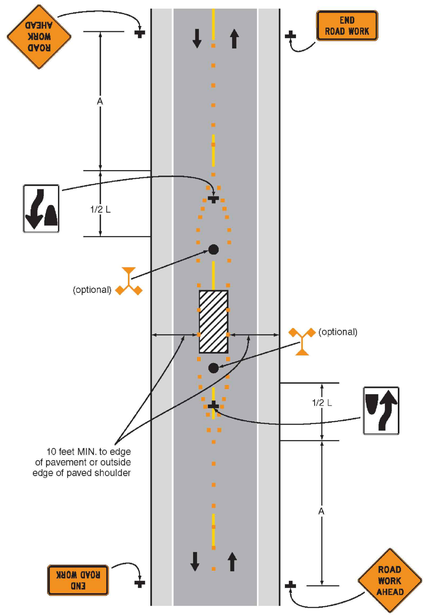

TYPICAL APPLICATION 15

WORK IN THE CENTER OF A ROAD WITH LOW TRAFFIC VOLUMES

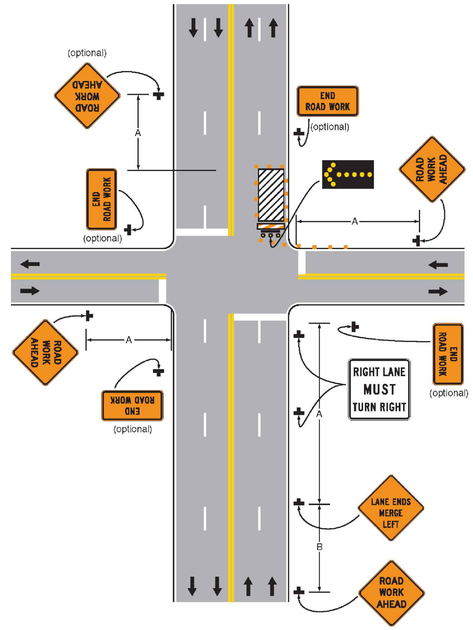

TYPICAL APPLICATION 22

RIGHT-HAND LANE CLOSURE ON THE FAR SIDE OF AN INTERSECTION

NOTES:

1. SEE SHEET 99 C-603 FOR TEMPORARY SIGN SUMMARY AND MEANING OF SYMBOLS AND/OR LETTER CODES.

Last saved by: CURRANM(2020-01-17) Last Plotted: 2020-01-17
Filename: L:\WORK\60476644 - ORLEANS DOWNTOWN SEWER\SHEETS\C\99 C-601.DWG

AECOM

PROJECT

DOWNTOWN AREA COLLECTION SYSTEM AND PUMP STATIONS

CONTRACT No. 2019-02
SRF No. 4486

OWNER

TOWN OF ORLEANS, MA
19 SCHOOL ROAD
ORLEANS, MA 02653
(508) 240-3700

ENGINEER

AECOM TECHNICAL SERVICES, INC.
9 JONATHAN BOURNE DRIVE
POCASSET, MA 02559
PHONE: (508) 833-6950
www.aecom.com

REGISTRATION

COMMONWEALTH OF MASSACHUSETTS
THOMAS E. PARECE
CIVIL
No. 34653
REGISTERED PROFESSIONAL ENGINEER

ISSUE/REVISION

I/R	DATE	DESCRIPTION

PROJECT NUMBER

60587515

Designed By:	**M. CURRAN**
Drawn By:	**M. CURRAN**
Dept Check:	**T. PARECE**
Proj Check:	**M. DONOGHUE**
Date:	**JANUARY 2020**
Scale:	**AS NOTED**

DISCIPLINE

SHEET TITLE

TRAFFIC MANAGEMENT TYPICAL APPLICATIONS I

SHEET NUMBER

99 C-601

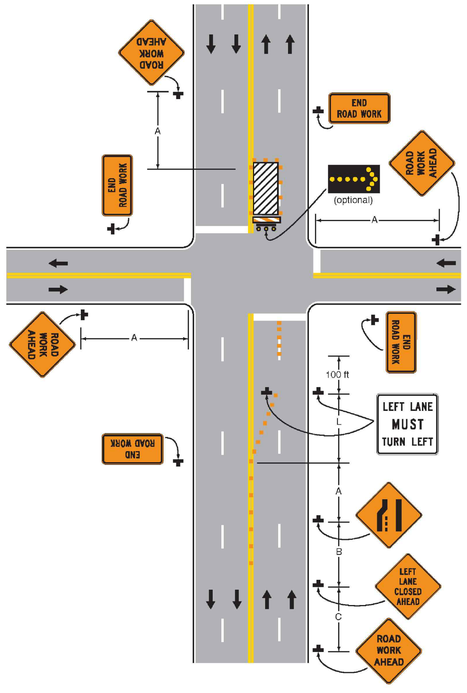

TYPICAL APPLICATION 23

LEFT–HAND LANE CLOSURE ON THE FAR SIDE OF AN INTERSECTION

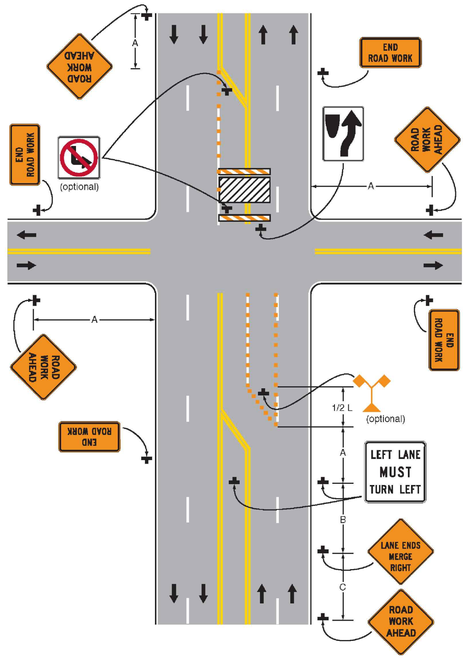

TYPICAL APPLICATION 25

MULTIPLE LANE CLOSURES AT AN INTERSECTION

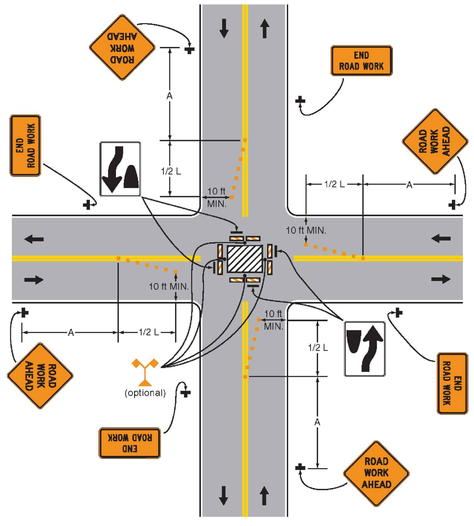

TYPICAL APPLICATION 26

CLOSURE IN THE CENTER OF AN INTERSECTION

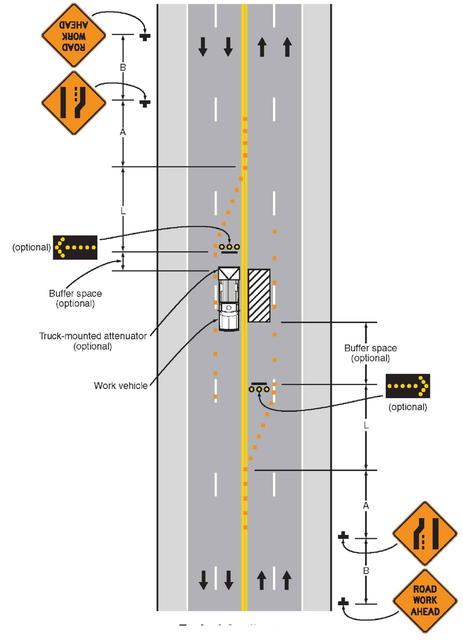

TYPICAL APPLICATION 30

INTERIOR LANE CLOSURE ON A MULTI–LANE STREET

NOTES:

1. SEE SHEET 99 C–603 FOR TEMPORARY SIGN SUMMARY AND MEANING OF SYMBOLS AND/OR LETTER CODES.

AECOM

PROJECT

DOWNTOWN AREA COLLECTION SYSTEM AND PUMP STATIONS

CONTRACT No. 2019-02
SRF No. 4486

OWNER

TOWN OF ORLEANS, MA
19 SCHOOL ROAD
ORLEANS, MA 02653
(508) 240-3700

ENGINEER

AECOM TECHNICAL SERVICES, INC.
9 JONATHAN BOURNE DRIVE
POCASSET, MA 02559
PHONE: (508) 833-6950
www.aecom.com

REGISTRATION

COMMONWEALTH OF MASSACHUSETTS
THOMAS E. PARECE
CIVIL
No. 34653
REGISTERED PROFESSIONAL ENGINEER

ISSUE/REVISION

I/R	DATE	DESCRIPTION

PROJECT NUMBER

60587515

Designed By:	**M. CURRAN**
Drawn By:	**M. CURRAN**
Dept Check:	**T. PARECE**
Proj Check:	**M. DONOGHUE**
Date:	**JANUARY 2020**
Scale:	**AS NOTED**

DISCIPLINE

CIVIL

SHEET TITLE

TRAFFIC MANAGEMENT TYPICAL APPLICATIONS II

SHEET NUMBER

99 C-602

Last saved by: CURRANM(2020-01-17) Last Plotted: 2020-01-17
Filename: L:\WORK\60476644 - ORLEANS DOWNTOWN SEWER\SHEETS\C\99 C-602.DWG

MEANING OF LETTER CODES ON TYPICAL APPLICATION DIAGRAMS

ROAD TYPE	DISTANCE BETWEEN SIGNS**		
	A	B	C
URBAN (LOW SPEED)*	100 ft	100 ft	100 ft
URBAN (HIGH SPEED)*	350 ft	350 ft	350 ft
RURAL	500 ft	500 ft	500 ft
EXPRESSWAY/FREEWAY	1,000 ft	1,500 ft	2,640 ft

NOTES:

* SPEED CATEGORY TO BE DETERMINED BY HIGHWAY AGENCY.

** DISTANCES ARE SHOWN IN FEET. THE COLUMN HEADINGS A, B AND C ARE THE DIMENSIONS SHOWN ON SHEET 99 C-601 AND 99 C-602.

- THE A DIMENSION IS THE DISTANCE FROM THE TRANSITION OR POINT OF RESTRICTION TO THE FIRST SIGN.
- THE B DIMENSION IS THE DISTANCE BETWEEN THE FIRST AND SECOND SIGNS.
- THE C DIMENSION IS THE DISTANCE BETWEEN THE SECOND AND THIRD SIGNS. (THE THIRD SIGN IS THE FIRST ONE IN A THREE-SIGN SERIES ENCOUNTERED BY A DRIVER APPROACHING A TEMPORARY TRAFFIC CONTROL ZONE.)

FORMULAS FOR L ARE AS FOLLOWS:

FOR SPEED LIMITS OF 40 mph OR LESS:

$$L = \frac{WS^2}{60}$$

FOR SPEED LIMITS OF 45 mph OR GREATER:

WHERE: L = TAPER LENGTH IN FEET

W = WIDTH OF OFFSET IN FEET

S = POSTED SPEED LIMIT, OR OFF-PEAK 85th-PERCENTILE SPEED PRIOR TO WORK STARTING, OR THE ANTICIPATED OPERATING SPEED IN mph

TEMPORARY SIGN SUMMARY

IDENTIFICATION NUMBER	SIZE OF SIGN W	SIZE OF SIGN H	TEXT	TEXT DIMENSIONS	COLOR/ LEGEND	NUMBER OF SIGNS REQUIRED*
G20-2	36"	18"	END ROAD WORK	SEE MUTCD STANDARDS	ORANGE	2
R4-7	24"	30"		SEE MUTCD STANDARDS	WHITE	2
W4-2	36"	36"		SEE MUTCD STANDARDS	ORANGE	1
W9-2	36"	36"	LANE ENDS MERGE LEFT	SEE MUTCD STANDARDS	ORANGE	1
W20-5	36"	36"	RIGHT LANE CLOSED 1/2 MILE	SEE MUTCD STANDARDS	ORANGE	1
W20-3	36"	36"	ROAD WORK AHEAD	SEE MUTCD STANDARDS	ORANGE	2
W20-4	36"	36"	ONE LANE ROAD XXFT	SEE MUTCD STANDARDS	ORANGE	2
W20-7a	36"	36"	XX FEET	SEE MUTCD STANDARDS	ORANGE	2

* NUMBER OF SIGNS REQUIRED BASED ON ONE CREW WORKING. ADDITIONAL SIGNS MAY BE NECESSARY FOR MULTIPLE CREWS

MEANINGS OF SYMBOLS ON TYPICAL APPLICATION DIAGRAMS

- WORK SPACE
- HIGH-LEVEL WARNING DEVICE (FLAG TREE)
- DIRECTION OF TRAFFIC
- POLICE OFFICER
- TYPE III BARRICADE
- CHANNELIZING DEVICE
- SIGN (SHOWN FACING LEFT)
- ARROW BOARD

AECOM

PROJECT

DOWNTOWN AREA COLLECTION SYSTEM AND PUMP STATIONS

CONTRACT No. 2019-02
SRF No. 4486

OWNER

TOWN OF ORLEANS, MA
19 SCHOOL ROAD
ORLEANS, MA 02653
(508) 240-3700

ENGINEER

AECOM TECHNICAL SERVICES, INC.
9 JONATHAN BOURNE DRIVE
POCASSET, MA 02559
PHONE: (508) 833-6950
www.aecom.com

REGISTRATION

COMMONWEALTH OF MASSACHUSETTS
THOMAS E. PARECE
CIVIL
No. 34453
REGISTERED PROFESSIONAL ENGINEER

ISSUE/REVISION

I/R	DATE	DESCRIPTION

PROJECT NUMBER

60587515

Designed By:	M. CURRAN
Drawn By:	M. CURRAN
Dept Check:	T. PARECE
Proj Check:	M. DONOGHUE
Date:	JANUARY 2020
Scale:	AS NOTED

DISCIPLINE

CIVIL

SHEET TITLE

TRAFFIC MANAGEMENT DETAILS & TEMPORARY SIGN SUMMARY

SHEET NUMBER

99 C-603

Last saved by: CURRANM(2020-01-17) Last Plotted: 2020-01-17
Filename: L:\WORK\60476844 - ORLEANS DOWNTOWN SEWERS\SHEETS\C\99 C-603.DWG

DWG. ABBREV.	ITEM	SYMBOL
	GATE VALVE	
	KNIFE VALVE	K
	PLUG VALVE	
	CONE VALVE	
	3-WAY PLUG VALVE	
	BUTTERFLY VALVE	
	BALL VALVE	
	3-WAY BALL VALVE	
	CHECK VALVE	
	COMBINED FUNCTION VALVE	
	WAFER CHECK VALVE	W
	SPLIT DISC CHECK VALVE	
	BALL CHECK VALVE	
	DIAPHRAGM VALVE	
HG	HOSE GATE	HG
	GLOBE VALVE	
	PINCH VALVE	
	NEEDLE VALVE	
	ANGLE VALVE	
	RELIEF VALVE	
	PRESSURE REGULATING VALVE	
	PRESSURE REDUCING VALVE	
	BACK PRESSURE VALVE	
	IRIS VALVE	
	MULTI ORIFICE VALVE	
	DUCK BILL CHECK VALVE	
	SPECTACLE FLANGE	
	UNION	
	FLAP VALVE *	
	MUD VALVE *	
	TELESCOPING VALVE *	T
	INSECT SCREEN	
	QUICK DISCONNECT COUPLING	
	FLEXIBLE HOSE	
	PULSATION DAMPENER	
	CALIBRATION STANDPIPE (COLUMN)	

*FLOW DIAGRAM ONLY

DWG. ABBREV.	ITEM	SYMBOL
	STATIC MIXER	
SG	SLIDE GATE	
SL	STOP LOG	
W	WEIR	W
VD	VOLUME DAMPER	VD
	EXISTING PIPE & FACILITIES	
	PROPOSED PIPE & FACILITIES	
	PIPE: 6" & SMALLER	
	PIPE: 8" & LARGER	
	FLANGE	
BF	BLIND FLANGE	BF
	WELDED	
PO	MECHANICAL JOINT	
PO	RESTRAINED PUSH ON JOINT	
	GROOVED COUPLING (PIPE 6" & SMALLER)	
	GROOVED COUPLING (PIPE 8" & LARGER)	
	SLEEVE COUPLING	
	RESTRAINED SLEEVE COUPLING	
	FLANGE ADAPTER	
	RESTRAINED FLANGE ADAPTER	
	BOLTED SPLIT SLEEVE COUPLING (PIPE 6" & SMALLER)	
	BOLTED SPLIT SLEEVE COUPLING (PIPE 8" & LARGER)	
	EXPANSION JOINT W/CONTROL RODS	
	CONCENTRIC REDUCER	
	ECCENTRIC REDUCER FLAT ON TOP	F.O.T.
	ECCENTRIC REDUCER FLAT ON BOTTOM	F.O.B.
	WYE STRAINER	
	INSULATION (PIPE 6" & SMALLER)	
	INSULATION (PIPE 8" & LARGER)	
	EXISTING PIPE TO BE REMOVED	

DWG. ABBREV.	ITEM	SYMBOL
FE	FLOW RATE CONTROLLER	
FE	VENTURI FLOW METER	
FE	MAGNETIC FLOW METER	
	ORIFICE PLATE	
	ROTAMETER	
G	GAUGE	
	RUPTURE DISC	
WS	WATER SURFACE	
	DIRECTION OF FLOW	
	END CAP	
	PITCH PIPE DOWN IN DIRECTION OF ARROW	
	LIMITS OF WORK (TRADE, CONTRACT, ETC.)	
	POINT OF CONNECTION NEW WORK TO EXISTING WORK	
	LIMITS (MATERIAL, FURNISHED BY, ETC.)	
	SAMPLE TO LAB	LAB 2
	CHEMICAL DIFFUSER AT PIPE	
	CHANNEL *	
ACTUATORS		
	MOTOR OPERATED	M
	SOLENOID OPERATED	S
	DIAPHRAGM	D
	CYLINDER – HYDRAULIC	H
	CYLINDER – PNEUMATIC	P
	ELECTRO – HYDRAULIC	EH
	EQUIPMENT MOTOR	M
WALL / FLOOR CASTINGS		
FLG x PO	FLANGE AND PUSH ON JOINT	WATERSTOP
PO x PO	PUSH ON JOINT AND PUSH ON JOINT	
PO x PE	PUSH ON JOINT AND PLAIN END	
FLG x FLG	FLANGE AND FLANGE	
FLG x PE	FLANGE AND PLAIN END	

*FLOW DIAGRAM ONLY

DWG. ABBREV.	ITEM	SYMBOL
EQUIPMENT		
	POSITIVE DISPLACEMENT BLOWER*	
	CENTRIFUGAL BLOWER*	
	AXIAL FLOW PUMP*	
	VERTICAL WET PIT PUMP*	
	VERTICAL TURBINE CAN PUMP*	
	CENTRIFUGAL PUMP*	
	SUBMERSIBLE CENTRIFUGAL PUMP*	
	DIAPHRAGM PUMP*	
	HOSE OR TUBING PUMP*	
	METERING PUMP*	
	PLUNGER PUMP*	
	ROTARY LOBE PUMP*	
	PROGRESSIVE CAVITY PUMP*	
	GRINDER*	G
	SCREW CONVEYOR*	
	HYDROCYCLONE*	
	MECHANICALLY CLEANED SCREEN*	

*FLOW DIAGRAM ONLY

DWG. ABBREV.	ITEM	SYMBOL
EQUIPMENT		
	STATIC INTAKE SCREEN*	
	INLINE STRAINER*	M M
	DUPLEX BASKET STRAINER*	
	SUBMERSIBLE MIXER*	M
	MIXER*	M

*FLOW DIAGRAM ONLY

AECOM

PROJECT

DOWNTOWN AREA COLLECTION SYSTEM AND PUMP STATIONS

CONTRACT No. 2019-02
SRF No. 4486

OWNER

TOWN OF ORLEANS, MA
19 SCHOOL ROAD
ORLEANS, MA 02653
(508) 240-3700

ENGINEER

AECOM TECHNICAL SERVICES, INC.
9 JONATHAN BOURNE DRIVE
POCASSET, MA 02559
PHONE: (508) 833-6950
www.aecom.com

REGISTRATION

COMMONWEALTH OF MASSACHUSETTS
CHRISTOPHER T. GALLIGAN
No. 40563
REGISTERED PROFESSIONAL ENGINEER
1/17/2020

ISSUE/REVISION

I/R	DATE	DESCRIPTION

PROJECT NUMBER

60587515

Designed By:	C. MINI
Drawn By:	N. RUBINI
Dept Check:	C. GALLIGAN
Proj Check:	T. PARECE
Date:	JANUARY 2020
Scale:	AS NOTED

DISCIPLINE

MECHANICAL PROCESS

SHEET TITLE

MECHANICAL PROCESS LEGEND

SHEET NUMBER

00 D-001

PATH/FILENAME: P:\60476644 - ORLEANS DOWNTOWN PUMP STATIONS\SHEETS\D000 D-001.DWG
LAST UPDATE: Friday, October 04, 2019 2:39:39 PM
PLOT DATE: Friday, January 17, 2020 8:01:01 AM

GENERAL NOTES:

1. EQUIPMENT AND SYSTEMS DIMENSIONS, LOCATIONS AND PIPING SYSTEM LAYOUTS ARE BASED ON EQUIPMENT SELECTED BY THE ENGINEER. IF CONTRACTOR PROPOSES TO PROVIDE EQUIPMENT THAT REQUIRES AN ARRANGEMENT OR SPACING DIFFERING FROM THAT INDICATED OR SPECIFIED, THE CONTRACTOR SHALL PREPARE AND SUBMIT TO THE ENGINEER FOR REVIEW DETAILED ARCHITECTURAL, STRUCTURAL, MECHANICAL, PLUMBING, INSTRUMENTATION HVAC AND ELECTRICAL DRAWINGS AND EQUIPMENT LISTS SHOWING ALL NECESSARY CHANGES AND EMBODYING ALL FEATURES OF THE EQUIPMENT AND/OR PROCESS SYSTEMS PROPOSED. THIS INFORMATION SHALL INCLUDE BUT NOT BE LIMITED TO PLANS, SECTIONS DETAILS AND SCHEMATICS OF ALL PIPING SYSTEMS AND APPURTENANCES REQUIRED, ELECTRICAL CONTROLS, CHEMICAL FEED SYSTEMS ETC.. SUCH CHANGES IF APPROVED BY THE ENGINEER SHALL BE AT NO ADDITIONAL COST TO THE OWNER AND NO TIME EXTENSION TO THE CONTRACT TIME TO COMPLETION. THE CONTRACTOR SHALL ASSUME THE COST OF AND THE RESPONSIBILITY FOR ACCOMPLISHING ALL THE NECESSARY CHANGES CORRESPONDING TO THE DIMENSIONS AND CHARACTERISTICS OF THE EQUIPMENT SUBMITTED AND APPROVED BY THE ENGINEER. REFER TO SPECIFICATIONS FOR FURTHER DETAILS.
2. THE CONTRACTOR SHALL MAKE ALL REQUIRED FIELD MEASUREMENTS TO VERIFY EXISTING AND CONTRACT INTERFACE DIMENSIONS, LOCATIONS, AND OTHER CONDITIONS.
3. REFER TO ARCHITECTURAL AND STRUCTURAL DRAWINGS FOR COVER PLATES, HATCHES, GRATING, AND RAILING DETAILS.
4. ALL PIPING UNDER CONCRETE SLABS OR STRUCTURES SHALL BE ENCASED IN CONCRETE, UNLESS OTHERWISE NOTED, REFER TO STRUCTURAL DRAWINGS.
5. ALL PIPING ENCASED IN CONCRETE SHALL HAVE PUSH-ON JOINTS AT ALL STRUCTURAL EXPANSION JOINTS.
6. PROVIDE EXPANSION JOINTS WITH CONTROL RODS FOR ALL EXPOSED PIPING CROSSING STRUCTURAL EXPANSION JOINTS.
7. ALL DIMENSIONS LOCATING EQUIPMENT ARE FROM FINISHED WALL SURFACES OR COLUMN CENTERLINES.
8. REFER TO INSTRUMENTATION DRAWINGS FOR INSTRUMENTATION AND CONTROL SYSTEMS. INSTRUMENT LOCATIONS ARE INDICATED ON MECHANICAL-PROCESS DRAWINGS IN APPROXIMATE LOCATION ONLY.
9. IN-LINE INSTRUMENTATION SHALL BE PROVIDED WITH ISOLATED PRESSURE TAPS, SEE INSTRUMENTATION DRAWINGS.
10. FOR CONTINUATION OF PIPING OUTSIDE STRUCTURES, SEE CIVIL DRAWINGS.
11. ALL PIPE PENETRATIONS THROUGH INTERIOR AND EXTERIOR WALLS AND FLOORS SHALL BE SEALED WATERTIGHT. ROOF PENETRATIONS SHALL BE SEALED IN ACCORDANCE WITH ARCHITECTURAL DETAILS.
12. SLEEVE OR GROOVED COUPLINGS MAY BE USED WHERE NECESSARY, AND AS APPROVED, TO FACILITATE PIPING INSTALLATION.
13. FOR FLANGED SYSTEMS PROVIDE FLEXIBLE CONNECTORS WHERE NECESSARY, AND AS APPROVED TO FACILITATE PIPING INSTALLATION AND VALVE AND EQUIPMENT REMOVAL.
14. ALL FLEXIBLE CONNECTORS, INCLUDING EXPANSION JOINTS AND SLEEVE COUPLINGS SHALL BE RESTRAINED AS INDICATED OR AS REQUIRED FOR EXPANSION AND FOR FLEXIBILITY.
15. PROVIDE ALL LIQUID PIPING WITH 3/4" LOW POINT DRAINS AND 3/4" HIGH POINT VENTS. DRAINS AND VENTS TO INCLUDE BALL VALVE AND CAP, UNLESS OTHERWISE SPECIFIED OR INDICATED.
16. SMALL PIPING (SAMPLE, SERVICE WATER, ETC.) IS SHOWN DIAGRAMMATICALLY: FIELD-ROUTING SUBJECT TO APPROVAL OF THE ENGINEER. SMALL PIPE ROUTING MUST NOT INTERFERE WITH ACCESS TO OR OPERATION OF ANY OTHER PIPE, VALVE, OR EQUIPMENT.
17. PORTIONS OF NON-PROCESS PIPING (PLUMBING, HVAC, CIVIL) ARE SHOWN FOR CLARITY OF DESIGN ONLY: REFER TO APPROPRIATE DRAWINGS AND SPECIFICATIONS FOR REQUIREMENTS.
18. ALL PROCESS EQUIPMENT, INCLUDING PUMPS, SHALL BE ISOLATED FROM PIPING LOADS AND DYNAMICS BY FLEXIBLE CONNECTORS IN ACCORDANCE WITH MANUFACTURER'S REQUIREMENTS AND AS SPECIFIED.
19. CONTRACTOR SHALL PROTECT ALL EQUIPMENT, PIPING, AND VALVES FROM DAMAGE DURING DEMOLITION. ALL REPAIRS TO DAMAGED EQUIPMENT, PIPE, AND VALVES SHALL BE PERFORMED BY THE CONTRACTOR AT NO ADDITIONAL COST TO THE OWNER.
20. BASE ELBOWS AND PIPE BRACES ARE SHOWN FOR PURPOSES OF ILLUSTRATION ONLY.
21. PROVIDE WALL MOUNTED SIGNS, IN ACCORDANCE WITH SPECIFIED ARCHITECTURAL REQUIREMENTS FOR ALL EXTERIOR WALL PENETRATIONS, INDICATING PIPE ORIGIN OR DESTINATION AND PIPE LABEL.
22. PROVIDE CONCRETE PADS FOR ALL FLOOR MOUNTED PROCESS EQUIPMENT, REFER TO STRUCTURAL DRAWINGS FOR DETAILS.
23. VENTS AND DRAINS:
    A. INSTALL VENT AND DRAIN PIPING AND VALVES SO THERE IS NO INTERFERENCE WITH ACCESS TO OR OPERATION OF ANY EQUIPMENT, VALVES, PIPING OR PANELS.
    B. PROVIDE ISOLATION VALVES FOR ALL VENTS AND DRAINS AS SPECIFIED AND INDICATED.
    C. LOCATE VALVES SO THAT THEY ARE ACCESSIBLE AND OPERABLE.
    D. PIPE ALL VENTS AND DRAINS SLOPED TO WET WELL AS INDICATED.
    E. WHERE PIPING RUNS ACROSS A FLOOR, INSTALL 2 INCHES MAXIMUM ABOVE FLOOR.
24. ALL PIPE PENETRATIONS INTO THE FOLLOWING AREAS SHALL BE SEALED GASTIGHT:
    A. WETWELLS
    B. VALVE VAULTS

MECHANICAL PROCESS GENERAL ABBREVIATIONS

ACFM	ACTUAL CUBIC FEET PER MINUTE
AFF	ABOVE FINISHED FLOOR
ANSI	AMERICAN NATIONAL STANDARDS INSTITUTE
APPROX.	APPROXIMATE
ARCH.	ARCHITECTURAL
ARV	AIR RELEASE VALVE
AVV	AIR VACUUM VALVE
B.O.D.	BOTTOM OF DUCT
CFM	CUBIC FEET PER MINUTE
CI	CAST IRON
℄	CENTERLINE
CL	CLASS
CMU	CONCRETE MASONARY UNIT
C.O.	CLEANOUT
CONC.	CONCRETE
CONN.	CONNECTION
CONT.	CONTINUATION
CPVC	CHLORINATED POLYVINYLCHLORIDE
CS	CARBON STEEL
CV	CONTROL VALVE
DEG. F.	DEGREES FAHRENHEIT
DET.	DETAIL
D.I.	DUCTILE IRON
DIA.	DIAMETER
DISCH.	DISCHARGE
DN	DOWN
DWG'S.	DRAWINGS
ExE	FLEXIBLE COUPLING (EXPANSION x EXPANSION)
ECC. RED.	ECCENTRIC REDUCER
EFF.	EFFLUENT
EFF. %	% EFFICIENCY
ELEC.	ELECTRICAL
EL.	ELEVATION
ELL.	ELBOW
ENCL.	ENCLOSURE
EQUIP.	EQUIPMENT
EXIST.	EXISTING
F	FAN
FxE	EXPANSION COUPLING (FIXED x EXPANSION)
FxF	RESTRAINED COUPLING (FIXED x FIXED)
FE	FLOW ELEMENT
F.F.	FLAT FACE
FIN. FL.	FINISHED FLOOR
FIN. GR.	FINISHED GRADE
FIT	FLOW INDICATING TRANSMITTER
FLEX.	FLEXIBLE
FLG.	FLANGE
F.O.B.	FLAT ON BOTTOM
F.O.S.	FLAT ON SIDE
F.O.T.	FLAT ON TOP
FT. / MIN	FEET PER MINUTE
FPS	FEET PER SECOND
FS	FLOW SWITCH
FT.	FEET
GAL.	GALLONS
GALV.	GALVANIZED
GPM	GALLONS PER MINUTE
HDPE	HIGH DENSITY POLYETHYLEYNE
HG	HOSE GATE
Hg	MERCURY
H.P.	HIGH POINT
HP	HORSE POWER
HPT	HOSE PIPE THREAD
HVAC	HEATING VENTILATION
H.W.L.	HIGH WATER LEVEL
I.D.	INSIDE DIAMETER
IN.	INCHES
INSUL.	INSULATION
INV.	INVERT
IPT	IRON PIPE THREAD
LB.	POUND
L.P.	LOW POINT
L.R.	LONG RADIUS
LSH	PRESSURE SWITCH LOW
LSP	LIQUID SAMPLE PORT
LXW	LENGTH X WIDTH
L.W.L.	LOW WATER LEVEL
M	METER
MAX.	MAXIMUM
MATL.	MATERIAL
MCC	MOTOR CONTROL CENTER
MECH.	MECHANICAL
MGD	MILLION GALLONS PER DAY
MH	MANHOLE
MIN.	MINIMUM
N.C.	NORMALLY CLOSED
N.O.	NORMALLY OPEN
NO.	NUMBER
NOM.	NOMINAL
NPSH	NET POSITIVE SUCTION HEAD
NPSHR	NET POSITIVE HEAD REQUIRED
NPT	NATIONAL PIPE THREAD
NRS	NON-RISING STEM
NTS	NOT TO SCALE
O.C.	ODOR CONTROL
O.D.	OUTSIDE DIAMETER
OPER.	OPERATING
P	PRESSURE GAUGE, PUMP
PE	PLAIN END
PI	PRESSURE INDICATOR
PIT	PRESSURE INDICATOR TRANSMITTER
PRI.	PRIMARY
PS	PRESSURE SWITCH
PSH	PRESSURE SWITCH HIGH
PSI	POUNDS PER SQUARE INCH
PSIA	POUNDS PER SQUARE INCH ABSOLUTE
PSIG	POUNDS PER SQUARE INCH GAGE
PSV	PRESSURE SAFETY SWITCH
PVC	POLYVINYLCHLORIDE
PVDF	POLYVINYLIDENE FLOURIDE
R	RADIUS
RED.	REDUCER / REDUCING
RED. FLG.	REDUCING FLANGE
REF.	REFERENCE
REQ'D.	REQUIRED
RPM	REVOLUTIONS PER MINUTE
SCH.	SCHEDULE
SH.	SHEET
SPECS.	SPECIFICATIONS
SQ.	SQUARE
S.R.	SHORT RADIUS
S.S	STAINLESS STEEL
STD.	STANDARD
STR.	STRUCTURAL
TEFC	TOTALLY ENCLOSED FAN COOLED
TEMP.	TEMPERATURE
TENV	TOTALLY ENCLOSED NON VENTILATED
T.O.C.	TOP OF CONCRETE
T.O.D.	TOP OF DUCT
T.O.S.	TOP OF STEEL
TSH	TEMPERATURE SWITCH HIGH
TYP.	TYPICAL
VD	VOLUME DAMPER
WxH	WIDTH x HEIGHT
WC	WATER COLUMN
XPROOF	EXPLOSION PROOF

AECOM

PROJECT

DOWNTOWN AREA COLLECTION SYSTEM AND PUMP STATIONS

CONTRACT No. 2019-02
SRF No. 4486

OWNER

TOWN OF ORLEANS, MA
19 SCHOOL ROAD
ORLEANS, MA 02653
(508) 240-3700

ENGINEER

AECOM TECHNICAL SERVICES, INC.
9 JONATHAN BOURNE DRIVE
POCASSET, MA 02559
PHONE: (508) 833-6950
www.aecom.com

REGISTRATION

COMMONWEALTH OF MASSACHUSETTS
CHRISTOPHER S. GALLIGAN
No.40563
REGISTERED PROFESSIONAL ENGINEER
1/17/2020

ISSUE/REVISION

I/R	DATE	DESCRIPTION

PROJECT NUMBER

60587515

Designed By:	C. MINI
Drawn By:	N. RUBINI
Dept Check:	C. GALLIGAN
Proj Check:	T. PARECE
Date:	JANUARY 2020
Scale:	AS NOTED

DISCIPLINE

MECHANICAL PROCESS

SHEET TITLE

GENERAL NOTES AND ABBREVIATIONS

SHEET NUMBER

00 D-002

PATH/FILENAME: P:\60476644 - ORLEANS DOWNTOWN PUMP STATION\SHEETS\00\00 D-002.DWG
LAST UPDATE: Friday, October 04, 2019 2:59:22 PM
PLOT DATE: Friday, January 17, 2020 8:01:05 AM

PROCESS PIPING SCHEDULE

LEGEND	SERVICE	SYSTEM DESIGN CONDITIONS				PIPING					INSULATION		VALVING			TEST REQUIREMENTS				SPECS. SECTION NUMBER	REMARKS
		TEMP. (DEG. F)		PRESSURE (PSI)		MATERIAL	DIAMETER RANGE	SCH./ CLASS	LINING/COATING	JOINT TYPE	TYPE	THICKNESS (IN.)	BLOCK	CHECK	THROTTLING	PRESSURE (PSI)	MEDIUM	TEST DURATION (MIN.)	LEAKAGE ALLOWANCE (SEE NOTES)		
		OPER.	MAX.	WORK.	MAX.																
D	DRAIN	SAME AS SYSTEM				DUCTILE IRON PVC	4" AND LARGER 3" AND SMALLER	SEE SPECS. SCH. 80	CEMENT ---	FLANGED/PUSH-ON FLANGED/SOCKET WELDED/PRESS-FIT	---	---	PLUG BALL	---	---	---	WATER	60	ZERO	02615 15370	
OC	ODOR CONTROL	0	100	---	14" WC	PVC	ALL	SCH. 80	---	SOLVENT WELDED/FLANGED	---	---	BUTTERFLY DAMPER	---	BUTTERFLY DAMPER	---	AIR	60	ZERO	15370	
RWW	RAW WASTEWATER	40	80	---	40	DUCTILE IRON	4" AND LARGER	SEE SPECS.	CEMENT	FLANGED RESTRAINED MECHANICAL JOINT	---	---	PLUG	RUBBER FLAPPER	---	60	WATER	60	ZERO	02615	
V	VENT	SAME AS SYSTEM				DUCTILE IRON	4" AND LARGER	SEE SPECS.	CEMENT	FLANGED/PUSH-ON	---	---	---	---	---	---	WATER	60	ZERO	02615	

PROCESS PIPING NOTES:

1. PIPING SCHEDULE ABOVE REFERS TO MECHANICAL PROCESS PIPING ONLY. REFER TO OTHER DISCIPLINES FOR ANY NON-PROCESS PIPING SHOWN AS BACKGROUND INFORMATION ON THE MECHANICAL DRAWINGS AND FOR CONTINUATION OF PIPING BEYOND MECHANICAL DISCIPLINE LIMITS OF WORK.
2. TEST VENTS AND DRAINS TO SAME PRESSURE AS SYSTEM.
3. FOR OPEN VENTS, FILL VENT WITH WATER AND TEST FOR LEAKS.
4. SAME AS SYSTEM.
5. USE TYPE 316L S.S. PIPE FOR DRAINS FROM DUCTILE IRON SERVICE FOR DRAINS 3" AND SMALLER.

PROCESS PIPING NOTES CONT.

5. PROVIDE FLANGES AT EQUIPMENT, VALVES AND AS INDICATED ON THE DRAWINGS.
6. ALL PIPING THAT IS NOT BURIED SHALL BE CONSIDERED EXPOSED.
7. PROVIDE INSULATION AND PROTECTIVE INSULATION JACKET AS SPECIFIED FOR ALL EXTERIOR INSULATED PIPING AND FOR ALL INTERIOR INSULATED PIPING 6'-6" OR LOWER TO THE FLOOR.
8. HEAT TRACE AND INSULATE WITH 2 INCHES (OR AS INDICATED) OF INSULATION AND JACKET AS SPECIFIED FOR ALL EXTERIOR EXPOSED PIPING TO 5 FEET BELOW GRADE.

PROCESS PUMP SCHEDULE

TAG NO.	NO. OF UNITS	NAME	LOCATION	PUMP TYPE AND CONFIGURATION	RATING POINT				MIN. SUCTION/ DISCHARGE SIZE (IN.)	NOMINAL MAX. PUMP SPEED (RPM)	SEAL TYPE	MOTOR				SPEC. SECTION	DISCHARGE GAUGE TYPE	BASIS OF DESIGN AND MODEL	REMARKS
					CAPACITY (GPM)	HEAD (FEET)	MIN. EFF. %	MINIMUM SHUTOFF HEAD (FT.)				HP	RPM	ENCL.	DRIVE TYPE				
PS1.P-1 THRU 3	3	RAW WASTEWATER PUMP	PUMP STATION NO. 1	SUBMERSIBLE RECESSED IMPELLER	552	86	45	85	4/4	1750	TANDEM MECH	40	1800	SUBMERSIBLE XP	DIRECT	11306	III	GOULDS HSUL 4x4x12	SEE NOTES
PS2.P-1, 2	2	RAW WASTEWATER PUMP	PUMP STATION NO. 2	SUBMERSIBLE RECESSED IMPELLER	536	86	45	90	4/4	1750	TANDEM MECH	40	1800	SUBMERSIBLE XP	DIRECT	11306	III	GOULDS HSUL 4x4x12	SEE NOTES
PS3.P-1, 2	2	RAW WASTEWATER PUMP	PUMP STATION NO. 3	SUBMERSIBLE RECESSED IMPELLER	305	71	43	73	3/3	1750	TANDEM MECH	30	1800	SUBMERSIBLE XP	DIRECT	11306	III	GOULDS HSUL 3x3x10	SEE NOTES

NOTES:

PS1.P-1 THRU 3:
1. VARIABLE FREQUENCY MOTOR CONTROLLER
2. FULL SPEED SECONDARY RATING POINT: 700 GPM AT 60 FEET WITH NO MORE THAN 26 FEET OF NPSH3.
3. MINIMUM SPEED RATING POINT: 160 GPM AT 39 FEET.
4. PROVIDE PUMPS CAPABLE OF PASSING A MINIMUM 3-INCH DIAMETER SPHERE.

PS2.P-1 AND 2:
1. VARIABLE FREQUENCY MOTOR CONTROLLER
2. FULL SPEED SECONDARY RATING POINT: 650 GPM AT 80 FEET WITH NO MORE THAN 24 FEET OF NPSH3.
3. MINIMUM SPEED RATING POINT: 105 GPM AT 38 FEET.
4. PROVIDE PUMPS CAPABLE OF PASSING A MINIMUM 3-INCH DIAMETER SPHERE.

PS3.P-1 AND 2:
1. VARIABLE FREQUENCY MOTOR CONTROLLER
2. FULL SPEED SECONDARY RATING POINT: 400 GPM AT 58 FEET WITH NO MORE THAN 22 FEET OF NPSH3.
3. MINIMUM SPEED RATING POINT: 50 GPM AT 52 FEET
PROVIDE PUMPS CAPABLE OF PASSING A MINIMUM 3-INCH DIAMETER SPHERE.

FAN SCHEDULE

TAG NO.	NUMBER OF UNITS	NAME	LOCATION	TYPE	RATING		MOTOR DATA			DRIVE TYPE	SPEC SECTION	BASIS OF DESIGN	REMARKS
					CFM	S.P. IN H20	HP	RPM (MAX.)	ENCL. TYPE				
PS1.OC-1	1	ODOR CONTROL FAN	PUMP STATION NO. 1	FRP CENTRIFUGAL	100	---	1.0	---	TEFC	DIRECT	15857	---	
PS2.OC-1 & PS3.OC-1	1	ODOR CONTROL FAN	PUMP STATION NO. 2 & 3	FRP CENTRIFUGAL	50	---	1.0	---	TEFC	DIRECT	15857	---	
PS1.EF-1, PS2.EF-1 & PS3.EF-1	3	EXHAUST FAN	PUMP STATION NO. 1 THRU 3	IN LINE CENTRIFUGAL	370	---	1.0	---	TEFC	DIRECT	15857	---	

HOIST SCHEDULE

TAG NO.	NUMBER OF UNITS	NAME	LOCATION	TYPE/CLASS	HOIST DATA			TROLLEY SPEED (FPM)	BOTTOM OF BEAM TO FIN. FL. (FT.)	MOTOR DATA				CONTROLS	REMARKS
					CAPACITY (TONS)	LIFT (FT.)	SPEED (FPM)			HOIST HP	TROLLEY HP	RPM MAX.	ENCL. TYPE		
DAV.HST-1	1	PORTABLE DAVIT HOIST	PUMP STATIONS 1, 2, & 3	PORTABLE DAVIT CRANE	1	45	---	---	---	---	---	---	---	MANUAL WINCH	SEE NOTES

PORTABLE DAVIT CRANE (DAV.HST-1) NOTES:

1. PROVIDE (3) FLUSH MOUNT BASES. INSTALL ONE BASE AT EACH PUMP STATION AS INDICATED ON THE DRAWINGS.

AECOM

PROJECT

DOWNTOWN AREA COLLECTION SYSTEM AND PUMP STATIONS

CONTRACT No. 2019-02
SRF No. 4486

OWNER

TOWN OF ORLEANS, MA
19 SCHOOL ROAD
ORLEANS, MA 02653
(508) 240-3700

ENGINEER

AECOM TECHNICAL SERVICES, INC.
9 JONATHAN BOURNE DRIVE
POCASSET, MA 02559
PHONE: (508) 833-6950
www.aecom.com

REGISTRATION

COMMONWEALTH OF MASSACHUSETTS
CHRISTOPHER M. GALLIGAN
No.40563
REGISTERED PROFESSIONAL ENGINEER
1/17/2020

ISSUE/REVISION

I/R	DATE	DESCRIPTION

PROJECT NUMBER

60587515

Designed By:	C. MINI
Drawn By:	N. RUBINI
Dept Check:	C. GALLIGAN
Proj Check:	T. PARECE
Date:	JANUARY 2020
Scale:	AS NOTED

DISCIPLINE

MECHANICAL PROCESS

SHEET TITLE

SCHEDULES

SHEET NUMBER

00 D-003

PATH/FILENAME: P:\60476644 - ORLEANS DOWNTOWN PUMP STATIONS\SHEETS\00\00 D-003.DWG
LAST UPDATE: Thursday, January 16, 2020 2:30:14 PM
PLOT DATE: Friday, January 17, 2020 8:01:10 AM

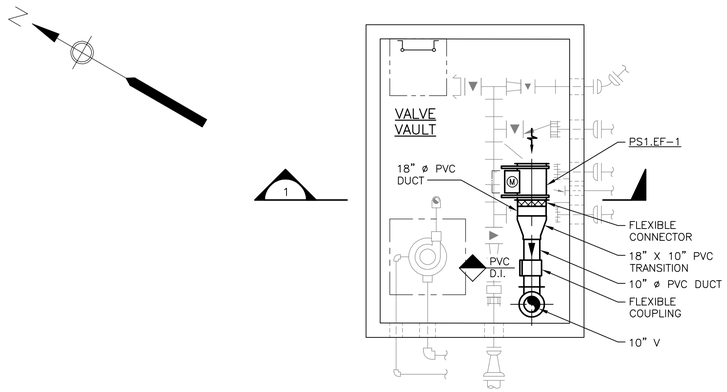

VENTILATION PLAN
SCALE: 1/4"=1'-0"

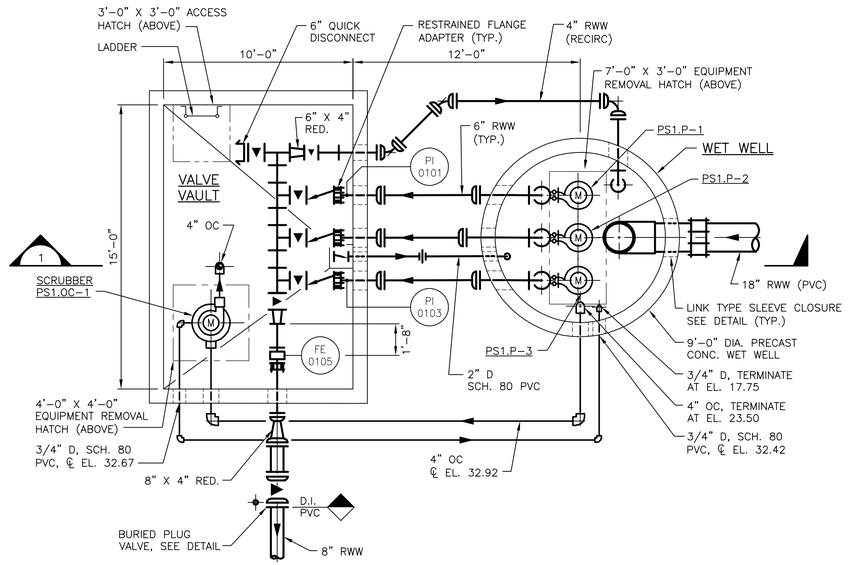

PLAN
SCALE: 1/4"=1'-0"

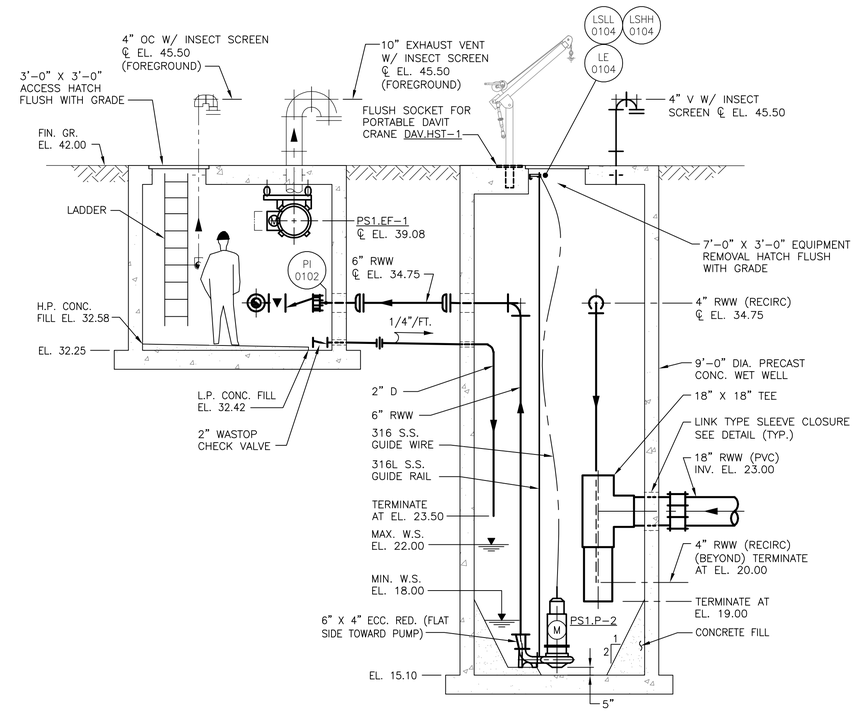

SECTION 1
SCALE: 1/4"=1'-0"

NOTES:

1. ALL SUPPORTS, ANCHORS, AND FASTENERS TO BE 316L STAINLESS STEEL.
2. ALL PIPE PENETRATIONS TO HAVE GALVANIZED STEEL CAST SLEEVES WITH LINK TYPE SEALS AS SPECIFIED. MANHOLE BOOTS ARE NOT ACCEPTABLE.
3. COORDINATE PUMP HATCH CLEAR OPENING WITH APPROVED PUMP SHOP DRAWINGS.
4. FOR CONTINUATION OF OUTSIDE PIPING SEE CIVIL DRAWINGS.

RAW WASTEWATER PUMP (PS1.P-1 THRU 3) OPERATING SET POINTS:
EL. 23.00 START LEAD PUMP AND ALARM (LSH)
EL. 22.50 HWL ALARM (LIT)
EL. 22.00 START LAG PUMP AND ALARM (LIT)
EL. 20.50 START LEAD PUMP (LIT)
EL. 18.00 STOP BOTH PUMPS AND SWITCH LEAD/LAG (LIT)
EL. 17.50 LWL ALARM (LIT)
EL. 17.00 STOP BOTH PUMPS AND SWITCH LEAD/LAG, AND ALARM (LSL)

0 4 8 12
SCALE IN FEET
SCALE: 1/4"=1'-0"

PATH/FILENAME:
LAST UPDATE: Thursday, January 16, 2020 2:54:28 PM
PLOT DATE: Friday, January 17, 2020 8:01:15 AM

AECOM

PROJECT

DOWNTOWN AREA COLLECTION SYSTEM AND PUMP STATIONS

CONTRACT No. 2019-02
SRF No. 4486

OWNER

TOWN OF ORLEANS, MA
19 SCHOOL ROAD
ORLEANS, MA 02653
(508) 240-3700

ENGINEER

AECOM TECHNICAL SERVICES, INC.
9 JONATHAN BOURNE DRIVE
POCASSET, MA 02559
PHONE: (508) 833-6950
www.aecom.com

REGISTRATION

COMMONWEALTH OF MASSACHUSETTS
CHRISTOPHER T. GALLIGAN
No.40563
REGISTERED PROFESSIONAL ENGINEER
1/17/2020

ISSUE/REVISION

I/R	DATE	DESCRIPTION

PROJECT NUMBER

60587515

Designed By:	C. MINI
Drawn By:	N. RUBINI
Dept Check:	C. GALLIGAN
Proj Check:	T. PARECE
Date:	JANUARY 2020
Scale:	AS NOTED

DISCIPLINE

MECHANICAL PROCESS

SHEET TITLE

PUMP STATION NO. 1 PLAN AND SECTION

SHEET NUMBER

01 D-101

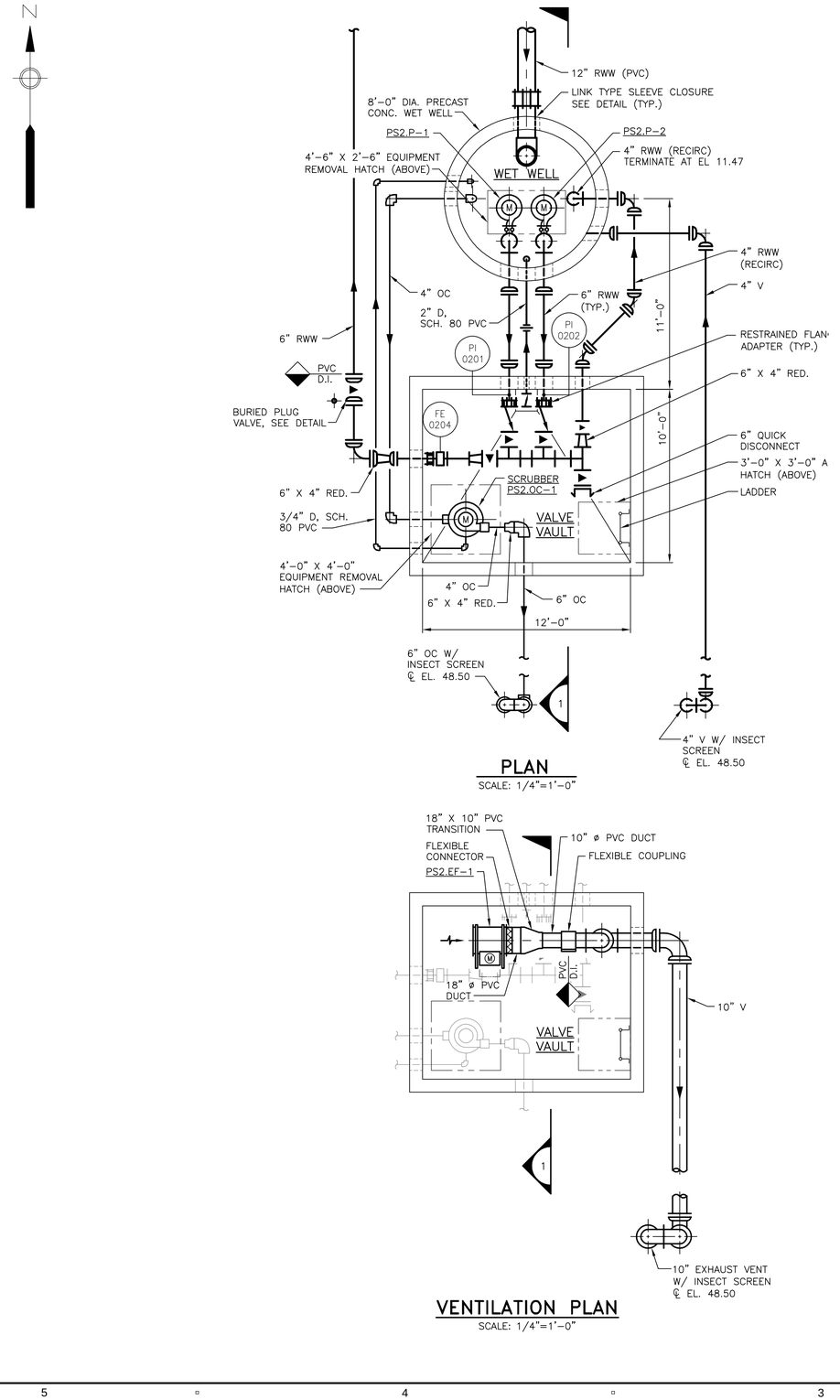

PLAN
SCALE: 1/4"=1'-0"

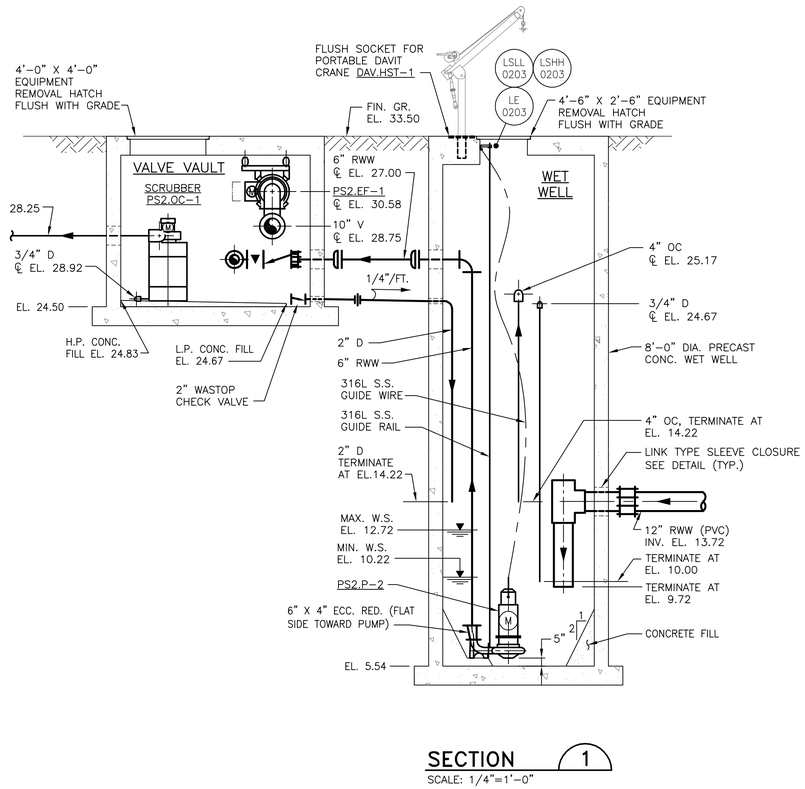

SECTION 1
SCALE: 1/4"=1'-0"

VENTILATION PLAN
SCALE: 1/4"=1'-0"

NOTES:

1. ALL SUPPORTS, ANCHORS, AND FASTENERS TO BE 316L STAINLESS STEEL.
2. ALL PIPE PENETRATIONS TO HAVE GALVANIZED STEEL CAST SLEEVES WITH LINK TYPE SEALS AS SPECIFIED. MANHOLE BOOTS ARE NOT ACCEPTABLE.
3. COORDINATE PUMP HATCH CLEAR OPENING WITH APPROVED PUMP SHOP DRAWINGS.
4. FOR CONTINUATION OF OUTSIDE PIPING SEE CIVIL DRAWINGS.

RAW WASTEWATER PUMP (PS2.P-1, 2) OPERATING SET POINTS:

EL.	13.72	START PUMP AND ALARM (LSH)
EL.	13.22	HWL ALARM (LIT)
EL.	12.72	START PUMP (LIT)
EL.	10.22	STOP PUMP (LIT)
EL.	9.72	LWL ALARM (LIT)
EL.	9.22	STOP PUMP AND ALARM (LSL)

0 4 8 12
SCALE IN FEET
SCALE: 1/4"=1'-0"

PATH/FILENAME:
LAST UPDATE: Thursday, January 16, 2020 3:04:54 PM
PLOT DATE: Friday, January 17, 2020 8:01:20 AM

AECOM

PROJECT

DOWNTOWN AREA COLLECTION SYSTEM AND PUMP STATIONS

CONTRACT No. 2019-02
SRF No. 4486

OWNER

TOWN OF ORLEANS, MA
19 SCHOOL ROAD
ORLEANS, MA 02653
(508) 240-3700

ENGINEER

AECOM TECHNICAL SERVICES, INC.
9 JONATHAN BOURNE DRIVE
POCASSET, MA 02559
PHONE: (508) 833-6950
www.aecom.com

REGISTRATION

COMMONWEALTH OF MASSACHUSETTS
CHRISTOPHER J. GALLIGAN
No.40563
REGISTERED PROFESSIONAL ENGINEER
1/17/2020

ISSUE/REVISION

I/R	DATE	DESCRIPTION

PROJECT NUMBER

60587515

Designed By:	C. MINI
Drawn By:	N. RUBINI
Dept Check:	C. GALLIGAN
Proj Check:	T. PARECE
Date:	JANUARY 2020
Scale:	AS NOTED

DISCIPLINE

MECHANICAL PROCESS

SHEET TITLE

PUMP STATION NO. 2 PLAN AND SECTION

SHEET NUMBER

01 D-102

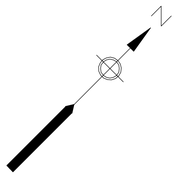

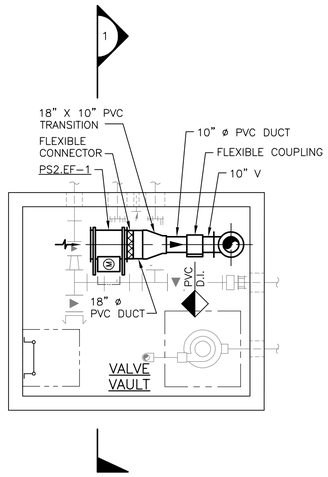

VENTILATION PLAN
SCALE: 1/4"=1'-0"

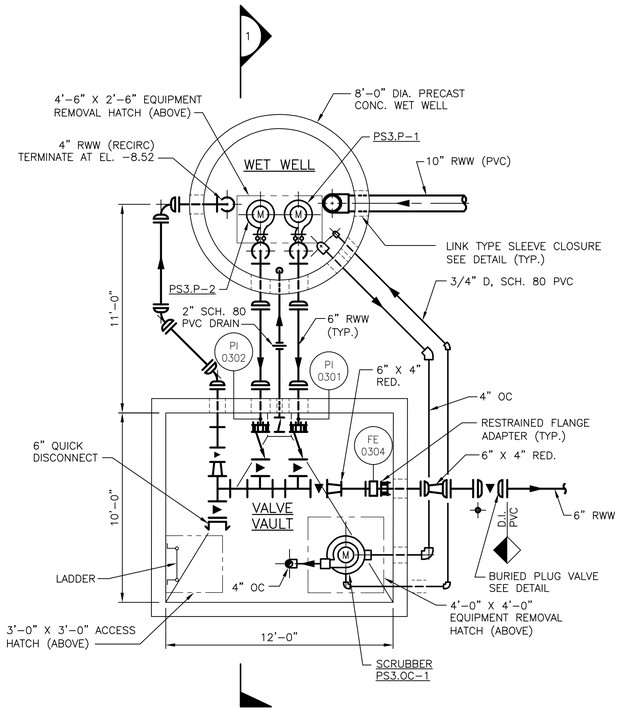

PLAN
SCALE: 1/4"=1'-0"

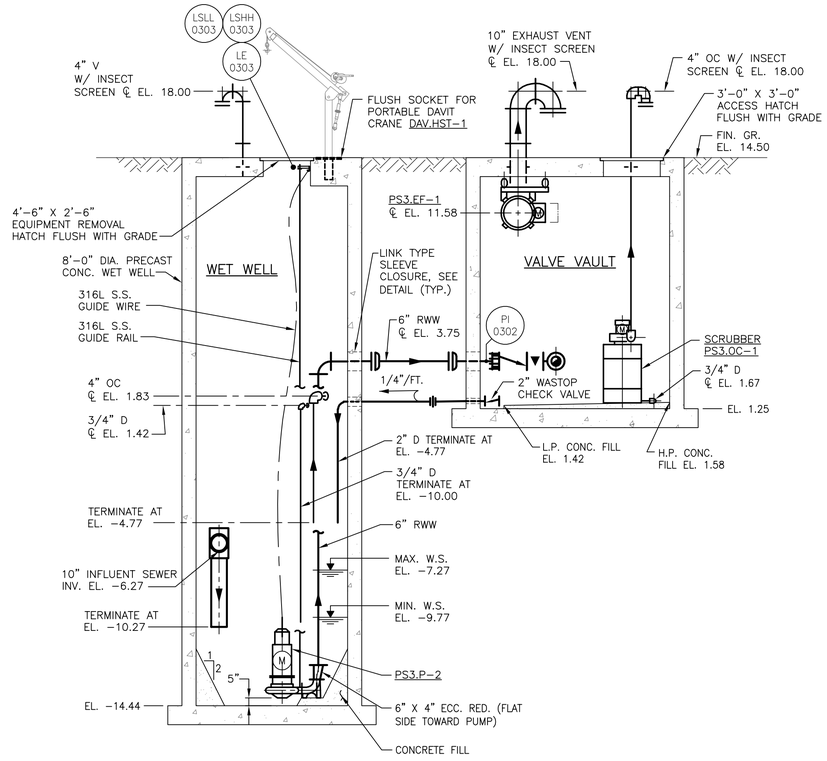

SECTION 1
SCALE: 1/4"=1'-0"

NOTES:

1. ALL SUPPORTS, ANCHORS, AND FASTENERS TO BE 316L STAINLESS STEEL.
2. ALL PIPE PENETRATIONS TO HAVE GALVANIZED STEEL CAST SLEEVES WITH LINK TYPE SEALS AS SPECIFIED. MANHOLE BOOTS ARE NOT ACCEPTABLE.
3. COORDINATE PUMP HATCH CLEAR OPENING WITH APPROVED PUMP SHOP DRAWINGS.
4. FOR CONTINUATION OF OUTSIDE PIPING SEE CIVIL DRAWINGS.

RAW WASTEWATER PUMP (PS3.P-1, 2) OPERATING SET POINTS:
EL. -6.27 START PUMP AND ALARM (LSH)
EL. -6.77 HWL ALARM (LIT)
EL. -7.27 START PUMP (LIT)
EL. -9.77 STOP PUMP (LIT)
EL. -10.27 LWL ALARM (LIT)
EL. -10.77 STOP PUMP AND ALARM (LSL)

0 4 8 12
SCALE IN FEET
SCALE: 1/4"=1'-0"

PATH/FILENAME:
LAST UPDATE: Thursday, January 16, 2020 3:24:25 PM
PLOT DATE: Friday, January 17, 2020 9:30:34 AM

AECOM

PROJECT

DOWNTOWN AREA COLLECTION SYSTEM AND PUMP STATIONS

CONTRACT No. 2019-02
SRF No. 4486

OWNER

TOWN OF ORLEANS, MA
19 SCHOOL ROAD
ORLEANS, MA 02653
(508) 240-3700

ENGINEER

AECOM TECHNICAL SERVICES, INC.
9 JONATHAN BOURNE DRIVE
POCASSET, MA 02559
PHONE: (508) 833-6950
www.aecom.com

REGISTRATION

COMMONWEALTH OF MASSACHUSETTS
CHRISTOPHER J. GALLIGAN
No.40563
REGISTERED PROFESSIONAL ENGINEER
1/17/2020

ISSUE/REVISION

I/R	DATE	DESCRIPTION

PROJECT NUMBER

60587515

Designed By:	C. MINI
Drawn By:	N. RUBINI
Dept Check:	C. GALLIGAN
Proj Check:	T. PARECE
Date:	JANUARY 2020
Scale:	AS NOTED

DISCIPLINE

MECHANICAL PROCESS

SHEET TITLE

PUMP STATION NO. 3 PLAN AND SECTION

SHEET NUMBER

01 D-103

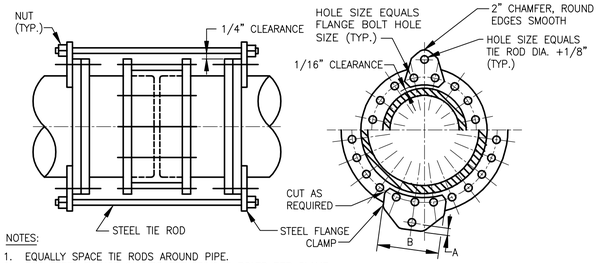

NOTES:

1. EQUALLY SPACE TIE RODS AROUND PIPE.
2. FOR STEEL FLANGE CLAMPS REQUIRING 3 BOLTS PER CLAMP, THE ORIENTATION OF THE STEEL FLANGE CLAMP AND PIPE FLANGE DRILLING IS PICTORIAL ONLY. EXACT ORIENTATION OF THE FLANGE CLAMP IS DETERMINED BY STANDARD FLANGE DRILLING.

PIPE SIZE	TIERODS		FLANGE CLAMP			
	NO.	DIA.	THICKNESS	NO. OF FLANGE BOLTS PER CLAMP	"A"	"B"
6"	2	1/2"	1/2"	2	2"	7 3/4"
8"	2	5/8"	1/2"	2	2"	8 5/8"
10"	2	3/4"	1/2"	2	2"	7 3/4"
12"	2	1"	1/2"	2	2"	8 1/2"
14"	2	1 1/8"	3/4"	2	2"	9"
16"	2	1 1/4"	7/8"	3	2"	12 1/4"
18"	2	1 3/8"	7/8"	3	2 1/2"	13"
20"	3	1 3/8"	1"	2	2 1/2"	8"
24"	4	1 3/8"	1"	2	2 1/2"	8 3/4"
30"	4	1 3/4"	1"	3	2 1/2"	12 1/4"
36"	6	1 3/4"	1 1/4"	2	2 1/2"	8 1/2"
42"	6	1 3/4"	1 1/4"	3	2 1/2"	12 3/4"
48"	8	1 3/4"	1 1/4"	3	2 1/2"	12 1/2"
54"	8	1 3/4"	1 1/4"	3	2 1/2"	12 1/2"
60"						
64"						

150 PSI SLEEVE COUPLING RESTRAINT FOR DUCTILE IRON PIPE

NTS

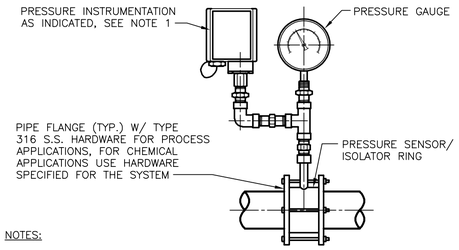

NOTES:

1. PROVIDE GUAGE AND PRESSURE INSTRUMENTATION (PIT, PS, ETC.) AS INDICATED AND SPECIFIED.
2. FOR CHEMICAL SYSTEM USE FULL FLANGE ONLY.

1 INCH AND LARGER

TYPE III PRESSURE GAUGE / INSTRUMENT ASSEMBLY

NTS

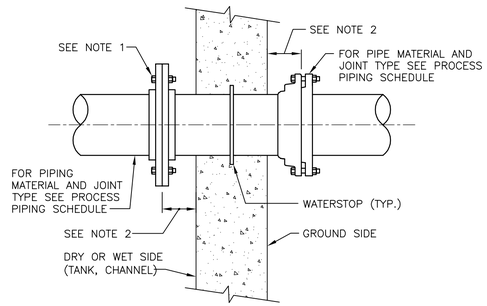

NOTES:

1. HARDWARE FOR WET SIDE SERVICE: TYPE 316 S.S
2. 12 INCHES UNLESS OTHERWISE INDICATED.

WALL PENETRATION (NEW CONSTRUCTION) (WET OR DRY ◄——► GROUND)

NTS

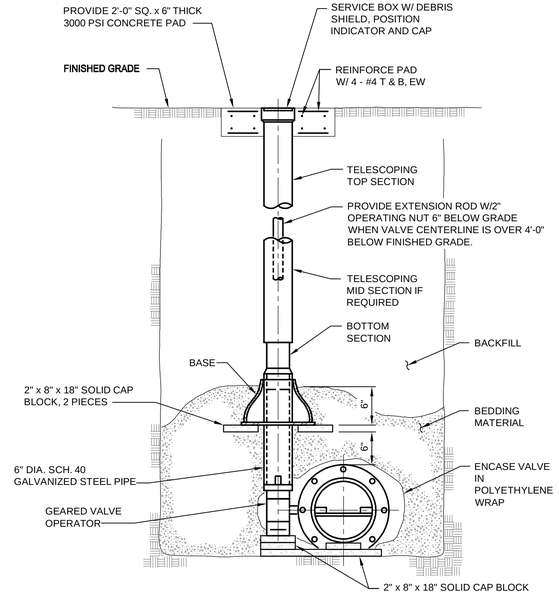

BURIED BUTTERFLY OR PLUG VALVE

NTS

AECOM

PROJECT

DOWNTOWN AREA COLLECTION SYSTEM AND PUMP STATIONS

CONTRACT No. 2019-02
SRF No. 4486

OWNER

TOWN OF ORLEANS, MA
19 SCHOOL ROAD
ORLEANS, MA 02653
(508) 240-3700

ENGINEER

AECOM TECHNICAL SERVICES, INC.
9 JONATHAN BOURNE DRIVE
POCASSET, MA 02559
PHONE: (508) 833-6950
www.aecom.com

REGISTRATION

COMMONWEALTH OF MASSACHUSETTS
CHRISTOPHER M. GALLIGAN
No. 40563
REGISTERED PROFESSIONAL ENGINEER
1/17/2020

ISSUE/REVISION

I/R	DATE	DESCRIPTION

PROJECT NUMBER

60587515

Designed By:	C. MINI
Drawn By:	C. MINI
Dept Check:	C. GALLIGAN
Proj Check:	T. PARECE
Date:	JANUARY 2020
Scale:	AS NOTED

DISCIPLINE

MECHANICAL PROCESS

SHEET TITLE

DETAILS

SHEET NUMBER

99 D-501

PATH/FILENAME:
LAST UPDATE: Friday, January 17, 2020 7:55:38 AM
PLOT DATE: Friday, January 17, 2020 8:01:30 AM

DIAGRAMS

- 1200 / 800 — CIRCUIT BREAKER, 3–POLE UNLESS OTHERWISE NOTED. UPPER NUMBER IS FRAME SIZE. LOWER NUMBER IS TRIP SETTING. WHERE ONLY ONE NUMBER IS SHOWN, NUMBER IS TRIP SETTING.
- MCP — MOTOR CIRCUIT PROTECTOR
- MAGNETIC STARTER
  - FVNR = FULL VOLTAGE, NON–REVERSING
  - FVR = FULL VOLTAGE, REVERSING
  - FVTS = FULL VOLTAGE, TWO SPEED
  - RVNR = REDUCED VOLTAGE, NON–REVERSING,
  - AUTO–TRANSFORMER TYPE
  - PW = PART WINDING
  - C = MAGNETIC CONTACTOR (WITHOUT OL.)
  - RVSS = REDUCED VOLTAGE, SOLID STATE
  - NUMBER INDICATES NEMA STARTER SIZE
- FVNR 2
- 30A — UNFUSED DISCONNECT SWITCH. NUMBER DENOTES AMPERE RATING.
- 100 / 70 — FUSED DISCONNECT SWITCH, 3–POLE UNLESS OTHERWISE NOTES. UPPER NUMBER INDICATES FUSE CLIP AMPERE SIZE. LOWER NUMBER INDICATES FUSE RATING.
- J — FUSE – LETTER DENOTES CLASS
- TRANSFORMER, SIZE AS NOTED, DELTA CONNECTION–PRIMARY. WYE CONNECTION GROUNDED–SECONDARY (LOW VOLTAGE).
- VFD — VARIABLE FREQUENCY DRIVE
- INPUT LINE REACTOR
- dV/dT — dV/dT OUTPUT FILTER
- 5 — SQUIRREL CAGE INDUCTION MOTOR. NUMBER DENOTES HORSEPOWER OR KW
- 5 — PACKAGED MOTOR WITH MOTOR, STARTER AND CONTROLS. NUMBER INDICATES KILOWATT RATING OR HORSEPOWER.
- F — 10KW — ELECTRIC UNIT HEATER 10KW INDICATES KILOWATT SIZE
- 600:5 (3) — CURRENT TRANSFORMER. UPPER NUMBERS ARE RATIO. NUMBER IN ( ) IS QUANTITY.
- GFP — GROUND FAULT PROTECTION
- ST — SHUNT TRIP RELAY
- R — INDICATING LIGHTS: R=RED, B=BLUE, G=GREEN, A=AMBER, W=WHITE
- K — KEY INTERLOCK
- K — MECHANICALLY INTERLOCKED (KEY)
- E — ELECTRICALLY INTERLOCKED
- NORMALLY OPEN CONTACT
- NORMALLY CLOSED CONTACT
- VS — VOLTMETER SELECTOR SWITCH
- AS — AMMETER SELECTOR SWITCH
- CS — CIRCUIT BREAKER CONTROL SWITCH
- CTB — CURRENT TEST BLOCK
- PTB — POTENTIAL TEST BLOCK
- SYS — SYNCHRONIZING SWITCH
- TB — TEST BLOCK
- 26 — PROTECTIVE RELAY
  - 2–TIME DELAY RELAY
  - 25 – SYNCHROCHECK RELAY
  - 26 – THERMAL DEVICE
  - 27 – UNDER VOLTAGE RELAY
  - 43 – TRANSFER DEVICE
  - 50 – INSTANTANEOUS OVER CURRENT RELAY
  - 64 – GROUND PROTECTIVE RELAY
  - 67 – DIRECTIONAL OVER CURRENT
  - 74 – ALARM RELAY
  - 83 – TRANSFER RELAY
  - 86 – LOCKOUT RELAY, HAND RESET
- A — A = AMMETER; D = DEMAND METER; F = FREQUENCY METER; KW = KILOWATT–HOUR METER; PF = POWER FACTOR METER; V = VOLTMETER; VAR = VARMETER; W = WATT METER; WH = WATT–HOUR METER
- 480:120 (1) CPT — DRAWOUT DEVICE. CPT = CONTROL POWER TRANSFORMER; PT = POTENTIAL TRANSFORMER. UPPER NUMBERS ARE RATIO. NUMBER IN ( ) IS QUANTITY

PLANS

- SD — SMOKE DUCT DETECTOR
- MANUAL MOTOR STARTER
- MAGNETIC MOTOR STARTER
- COMBINATION MAGNETIC MOTOR STARTER AND DISCONNECT SWITCH
- UNFUSED DISCONNECT SWITCH
- F — FUSED DISCONNECT SWITCH
- PANELBOARD
- M — MOTOR FURNISHED AND INSTALLED UNDER OTHER DIVISION, CONNECTED UNDER DIVISION 16.
- M — PACKAGED MOTOR WITH MOTOR STARTER AND CONTROL FURNISHED AND INSTALLED UNDER OTHER DIVISIONS, CONNECTED UNDER DIVISION 16.
- EQUIPMENT FURNISHED AND INSTALLED UNDER OTHER DIVISIONS, CONNECTED UNDER DIVISION 16.
- J — JUNCTION BOX
- G — GROUND ROD: TYPE AND SIZE AS INDICATED ON PLAN OR IN SPECIFICATIONS.
- G — G — EXOTHERMIC CONNECTION
- GROUND ROD AND TEST WELL
- G — GROUND PLATE: TYPE AND SIZE AS INDICATED ON PLAN OR IN SPECIFICATIONS.
- G — G — EXOTHERMIC CONNECTION
- G — G — BOLTED CONNECTION
- G — GROUNDING CABLE
- CONDUIT RUNS UNDERGROUND OR EMBEDDED IN CONCRETE
- CONDUIT RUNS OVERHEAD
- CONDUIT RUNS PIPE LINE HEAT TRACING. FOR RATING SEE SPECIFICATIONS AND PLANS
- XXX — SEE ABBREVIATION FOR ITEM TYPE
- ELECTRICAL UTILITY POLE
- DT3 1 a — SURFACE, RECESSED OR PENDANT MOUNTED LUMINARIE
- SURFACE, RECESSED OR PENDANT MOUNTED LUMINARIE
- SURFACE, RECESSED OR PENDANT MOUNTED NON–SWITCHED LUMINARIE (NIGHT LIGHT)
- WALL MOUNTED INCANDESCENT, FLUORESCENT OR HIGH INTENSITY DISCHARGE LUMINARIE
- POLE OR POST–TOP MOUNTED LUMINARIE
- ROADWAY LUMINARIE
- WALL MOUNTED EXIT LIGHT. ARROW (IF SHOWN) INDICATES DIRECTION OF EGRESS
- CEILING OR PENDANT MOUNTED EXIT LIGHT. ARROW (IF SHOWN) INDICATES DIRECTION OF EGRESS
- BATTERY OPERATED AUXILIARY LIGHTING UNIT, MOUNT 7'–6" ABOVE FINISHED FLOOR UNLESS OTHERWISE NOTED
- REMOTE MOUNTED AUXILIARY LIGHTING HEAD MOUNTED 7'–6" ABOVE FLOOR UNLESS OTHERWISE NOTED.

"1" DENOTES PANELBOARD BRANCH CIRCUIT #1. "a" DENOTES CONTROLLED BY LOCAL SWITCH "a". "DT3" DENOTES FIXTURE TYPE. "E" DENOTES EXISTING FIXTURE

TYPICAL DUCT BANK SECTION LEGEND

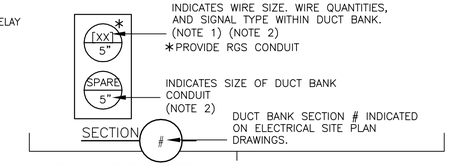

DUCT BANK SECTION NOTES:

1. CONDUIT SIZE INDICATE ON DUCT BANK SECTION TAKES PRECEDENCE OVER CONDUIT SIZE INDICATED ON CONDUIT AND WIRE SCHEDULE PER SHEET 00 E–601. PROVIDE WIRE SIZE AND QUANTITIES AS INDICATED ON CONDUIT AND WIRE SCHEDULE ON SHEET 00 E–601.
2. WHERE MULTIPLE CONDUITS ARE CALLED OUT IN A SINGLE SECTION (EXAMPLE – [PA][PA]) PROVIDE COMBINED QUANTITY OF WIRES PER CONDUIT AND WIRE SCHEDULE INSTALLED IN A SINGLE CONDUIT SIZED AS INDICATED ON THE DUCT BANK SECTION.

PLANS

- S_a — SINGLE POLE SWITCH CONTROLS FIXTURES MARKED "a"
- $S2_b$ — DOUBLE POLE SWITCH CONTROLS FIXTURES MARKED "b"
- $S3_c$ — THREE–WAY SWITCH CONTROLS FIXTURES MARKED "c"
- $S4_d$ — FOUR–WAY SWITCH CONTROLS FIXTURES MARKED "d"
- HOA_e — HAND–OFF–AUTO SELECTOR SWITCH CONTROLS FIXTURES MARKED "e"
- S_{MD} — MOTION DETECTOR INTERGRAL TO WALL SWITCH
- OS — OCCUPANCY SENSOR (CEILING MOUNTED)
- FLOOR/CEILING MOUNTED QUAD RECEPTACLE/DATA RECEPTACLE REFER TO FLOOR PLANS AND LEGEND FOR ADDITIONAL INFORMATION (GROUND TYPE)
- FLOOR/CEILING MOUNTED QUAD RECEPTACLE REFER TO FLOOR PLANS AND LEGEND FOR ADDITIONAL INFORMATION (GROUND TYPE)
- FLOOR/CEILING MOUNTED DUPLEX RECEPTACLE REFER TO FLOOR PLANS AND LEGEND FOR ADDITIONAL INFORMATION (GROUND TYPE)
- FLOOR/CEILING MOUNTED DATA RECEPTACLE REFER TO FLOOR PLANS AND LEGEND FOR ADDITIONAL INFORMATION
- GFCI — DUPLEX RECEPTACLE (GROUND TYPE) GFCI DENOTES GROUND FAULT CIRCUIT INTERRUPTER
- WPG — DUPLEX RECEPTACLE (GROUND TYPE) GFCI WITHIN WEATHERPROOF ENCLOSURE
- GFCI — QUAD RECEPTACLE (GROUND TYPE) GFCI DENOTES GROUND FAULT CIRCUIT INTERRUPTER
- SPECIAL PURPOSE RECEPTACLE, TYPE AND AMPERE RATING AS INDICATED ON PLAN
- WP — DUPLEX RECEPTACLE (GROUND TYPE), "WP" DENOTES WEATHERPROOF, "XP" DENOTES EXPLOSION PROOF
- W — RECESSED TELEPHONE/DATA OUTLET, W INDICATES MOUNTED 48" A.F.F.
- W — SURFACE MOUNTED TELEPHONE/DATA OUTLET, W INDICATES MOUNTED 48" A.F.F.
- W — RECESSED DATA OUTLET, W INDICATES MOUNTED 48" A.F.F.
- W — SURFACE MOUNTED DATA OUTLET, W INDICATES MOUNTED 48" A.F.F.
- W — RECESSED TELEPHONE OUTLET, W INDICATES MOUNTED 48" A.F.F.
- W — SURFACE MOUNTED TELEPHONE OUTLET, W INDICATES MOUNTED 48" A.F.F.
- RI — REMOTE INDICATOR
- I — SURFACE MOUNTED INTERCOM WALL OUTLET AND HAND STATION, MOUNTED 48" A.F.F.
- I — CEILING FLUSH MOUNTED INTERCOM SPEAKER
- I — TRUMPET TYPE INTERCOM LOUDSPEAKER, WALL MOUNTED
- SURFACE MOUNTED DATA OUTLET

SECURITY

- CR — CARD ACCESS READER (MOUNTED 3'–6" A.F.F.)
- KP — KEYPAD ENTRY (MOUNTED 3'–6" A.F.F.)
- EDL — ELECTRONIC DOOR LOCK (COORD. MOUNTING HEIGHT WITH ARCHITECTURAL PLANS AND DOOR HARDWARE REQUIREMENTS)
- MD REX — REQUEST TO EXIT DETECTOR (COORD. MOUNTING HEIGHT WITH ARCHITECTURAL PLANS AND DOOR HARDWARE REQUIREMENTS)
- CCTV CAMERA WITH INFRARED ILLUMINATOR (CEILING MOUNTED)
- CRCP — CARD READER CONTROL PANEL (MOUNTED 3'–6" A.F.F.
- SSCP — SECURITY CONTROL PANEL (MOUNTED 3'–6" A.F.F.)
- MD — MOTION DETECTOR (CEILING MOUNTED)
- MD REX — REQUEST TO EXIT MOTION DETECTOR (CEILING MOUNTED)

LEGEND:

- DEMOLITION WORK – COORDINATE DISCONNECTING AND REMOVING ELECTRICAL WORK WITH DEMOLITION WORK PROVIDED UNDER OTHER DIVISIONS.
- NEW WORK
- EXISTING WORK

ABBREVIATIONS

AFF	ABOVE FINISHED FLOOR
AFG	ABOVE FINISHED GRADE
AHU	AIR HANDLING UNIT
AL	ALARM
AN	ANNUNCIATOR
ARMS	ARC REDUCTION MAINTENANCE SWITCH
ATO	AUTOMATIC THROW–OVER SYSTEM
ATS	AUTOMATIC TRANSFER SWITCH
CAH	CHEMICAL ALARM HORN
CHS	CHEMICAL ALARM INITIATING HAND SWITCH
CAP	CHEMICAL ALARM PANEL
CLF	CURRENT LIMITING FUSE
CMS	COMBINATION MOTOR STARTER
CP	CONTROL PANEL
CPT	CONTROL POWER TRANSFORMER
CR	CONTROL RELAY
CS	CONTROL SWITCH
DP	DISTRIBUTION PANEL
DS	DISCONNECT SWITCH
EF	EXHAUST FAN
EHH	ELECTRICAL HAND HOLE
EL	ELEVATION
EMH	ELECTRICAL MANHOLE
EOV	ELECTRICALLY OPERATED VALVE
ES	EMERGENCY STOP SWITCH (MAINTAINED CONTACT) (PROVIDE DEVICE THAT CAN BE LOCKED IN THE OFF POSITION)
EUH	ELECTRIC UNIT HEATER
EWC	ELECTRIC WATER COOLER
FAA	FIRE ALARM ANNUNCIATOR PANEL
FACP	FIRE ALARM CONTROL PANEL
FANM	FIRE ALARM NETWORK MODULE
FS	SPRINKLER SYSTEM FLOW SWITCH
FSL	FIRE ALARM STATUS LIGHT
FIS	IONIZATION SMOKE DETECTOR STATUS STATION
FSR	FORWARD–STOP–REVERSE
FTC	FIRE FIGHTER'S TELEPHONE STORAGE CABINET
GANP	GENERATOR ANNUCIATOR PANEL
GEN	GENERATOR
GFP	GROUND FAULT PROTECTION
GFCI	GROUND FAULT CIRCUIT INTERRUPTER
GND	GROUND
GSC	GROUNDED SERVICE CONDUCTOR
GSCT	GROUND SENSING CURRENT TRANSFORMER
G	GROUND
HA	HAND–AUTOMATIC
HH	HAND HOLE
HOA	HAND–OFF–AUTOMATIC
HP	HORSEPOWER
HS	HAND SWITCH
HTR	MOTOR HEATER
HWT	HIGH WATER TEMPERATURE SWITCH
ISB	INTRINSICALLY SAFE BARRIER
JB	JUNCTION BOX
KP	KEY PAD
KS	KEY SWITCH
KW	KILOWATT
LCS	LOCAL CONTROL STATION
LOR	LOCAL–OFF–REMOTE
LP	LIGHTING PANEL
LR	LOCAL–REMOTE
LS	LIMIT SWITCH
MH	MANHOLE
MCC	MOTOR CONTROL CENTER
MCP	MOTOR CIRCUIT PROTECTOR

ABBREVIATIONS

MM MS	MAINTENANCE MODE MOTOR STARTER
MOV	MOTOR OPERATED VALVE
MVT	PAD–MOUNTED TRANSFORMER
NATS	NON–AUTOMATIC TRANSFER SWITCH
NIR	NOT IN REMOTE
NO	NORMALLY OPEN
NC	NORMALLY CLOSED
OC	OPEN–CLOSE
O/C/T	OPEN/CLOSE/TRIP
OL'S	MOTOR OVERLOADS
OSC	OPEN–STOP–CLOSE
PLC	PROCESS LOGIC CONTROLLER
PM	POWER MONITOR
ROA	RUN–OFF–AUTOMATIC
ROR	RUN–OFF–REMOTE
SAAP	SECURITY ALARM ANNUNCIATOR PANEL
SSCP	SECURITY CONTROL PANEL
SEL	SELECTOR SWITCH
SF	SLOW–FAST
SFS	SLOW–FAST–STOP
SOFA	SLOW–OFF–FAST–AUTOMATIC
SPD	SURGE PROTECTION DEVICE
SS	START–STOP
SV	SOLENOID VALVE
SW	SWITCH
T	THERMOSTAT
TC	TIMED CLOSE
TD	TIME DELAY RELAY
TO	TIMED OPEN
TI	TIMER
TQ	TORQUE ALARM SWITCH
TR	TRANSFORMER
TS	TEMPERATURE SENSOR
TX	TRANSFORMER, DRY–TYPE
TTC	TELEPHONE TERMINAL CABINET
TYP	TYPICAL
UPS	UNINTERRUPTIBLE POWER SUPPLY
VFD	VARIABLE FREQUENCY DRIVE
W	DENOTES WATERTIGHT EQUIPMENT
WP	DENOTES WEATHERPROOF EQUIPMENT
XFMR	TRANSFORMER
XP	DENOTES EXPLOSION PROOF EQUIPMENT
XST	EXISTING
ZSS	ZERO SPEED SWITCH
AE	ANALYZER SENSOR
AIT	ANALYZER INDICATING TRANSMITTER
CFS	CHEMICAL FILL STATION PANEL
FE	FLOW ELEMENT
FIT	FLOW INDICATING TRANSMITTER
LIT	LEVEL INSTRUMENT TRANSMITTER
LSH	LIMIT SWITCH HIGH LEVEL
LSL	LIMIT SWITCH LOW LEVEL
LSHH	LIMIT SWITCH HIGH–HIGH LEVEL
MSH	MOISTURE SWITCH HIGH
O2	OXYGEN MONITOR
PS	PRESSURE SWITCH
TSH	TEMPERATURE SWITCH HIGH

GENERAL NOTES

1. SWITCHBOARD AND MCC COMPARTMENT DESIGNATIONS AS FOLLOWS:
   - BLANK: NOT INTENDED FOR USE, PLATE ONLY.
   - SPACE: CONTAINS NECESSARY BUS AND HARDWARE FOR FUTURE ADDITION OF BREAKERS OR STARTERS WITHIN SIZE RANGE SHOWN
   - SPARE: CONTAINS A COMPLETE BREAKER, VFD OR STARTER INSTALLED, SIZE AS INDICATED AVAILABLE FOR FUTURE USE.
2. CONDUIT INSTALLATIONS ARE SHOWN DIAGRAMMATICALLY ONLY AND SHALL BE INSTALLED IN A MANNER TO PREVENT CONFLICTS WITH EQUIPMENT AND STRUCTURAL CONDITIONS. EXPOSED CONDUITS SHALL BE INSTALLED PARALLEL TO BEAMS AND WALLS.
3. CONDUIT AND WIRE (NOT SHOWN) FOR LIGHTING FIXTURES, SWITCHES AND/OR RECEPTACLES SHALL BE FURNISHED AND INSTALLED AND SHALL BE:
   - A. 3/4" (MIN.) RIGID METAL CONDUIT
     - A1. EXPOSED IN UNFINISHED AREAS.
     - A2. CONCEALED ABOVE SUSPENDED CEILINGS AND IN WALLS IN FINISHED AREAS.
   - B. NO. 12 CU. WIRE (MIN.) TYPE "THWN/THHN" NO. OF WIRES AS REQUIRED, INCLUDING GROUND. PROVIDE TRAY RATED CABLE WHEN RUN IN CABLE TRAY.
4. PROVIDE COMPONENTS AND DEVICE ENCLOSURES RATED IN ACCORDANCE WITH THE NEMA RATINGS ON THE AREA CLASSIFICATION SCHEDULE.
5. DUCT BANK CONDUIT SIZES ARE GIVEN IN THE DUCT BANK CALLOUTS. WHERE THE SAME CONDUIT NUMBER IS USED BOTH IN THE DUCT BANK AND IN A BUILDING, THE CONDUIT SIZE GIVEN IN THE CONDUIT SCHEDULE APPLIES TO THE CONDUIT IN THE BUILDING ONLY.
6. FURNISH METAL PIPE SLEEVES FOR CONDUITS ROUTED THROUGH WALLS TO THE CONTRACTOR FOR PLACING IN WALLS PRIOR TO POURING OF CONCRETE.

ELECTRICAL SHEET NUMBERING

XY E–ZZZ

- ZZZ – DRAWING NUMBER
  - 000: GENERAL
  - 100: PLANS – ELECTRICAL PLANS
  - 500: ELECTRICAL DETAILS DETAILS
  - 600: ELECTRICAL DIAGRAMS AND SCHEDULES
- XY – SITE LOCATION
  - 00: GENERAL
  - 01: PUMP STATION NO.1 (NAMSKAKET)
  - 02: PUMP STATION NO.2 (SNOW)
  - 03: PUMP STATION NO.3 (NAUSET)
  - 99: DETAILS

EXAMPLE:
00 E–601 – ELECTRICAL SCHEDULES I
01 E–001 – PUMP STATION NO.1 – ELECTRICAL SITE PLAN

AECOM

PROJECT

DOWNTOWN AREA COLLECTION SYSTEM AND PUMP STATIONS

CONTRACT No. 2019-02
SRF No. 4486

OWNER

TOWN OF ORLEANS, MA
19 SCHOOL ROAD
ORLEANS, MA 02653
(508) 240-3700

ENGINEER

AECOM TECHNICAL SERVICES, INC.
9 JONATHAN BOURNE DRIVE
POCASSET, MA 02559
PHONE: (508) 833-6950
www.aecom.com

REGISTRATION

COMMONWEALTH OF MASSACHUSETTS — ANDREA J. ABRAHAM — ELECTRICAL NO. 54966 — REGISTERED PROFESSIONAL ENGINEER

01-24-2020

ISSUE/REVISION

I/R	DATE	DESCRIPTION

PROJECT NUMBER

60587515

Designed By:	A. ABRAHAM
Drawn By:	A. ABRAHAM
Dept Check:	Y. RIZK
Proj Check:	T. PARECE
Date:	JANUARY 2020
Scale:	AS NOTED

DISCIPLINE

ELECTRICAL

SHEET TITLE

ELECTRICAL LEGEND, ABBREVIATIONS, AND GENERAL NOTES

SHEET NUMBER

00 E-001

Last saved by: ABRAHAMA(2020-01-27) Last Plotted: 2020-01-27
Filename: \\USCHLIFP001\DATA\PROJECTS\WAKEFIELD\DATA_3\PROJ\60476644 - ORLEANS DOWNTOWN PUMP STATION\SHEETS\E00 E-001.DWG

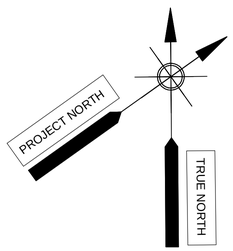

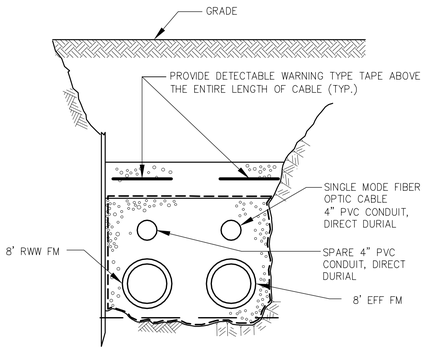

TRENCH DETAIL (S3, 00 E-002)
NTS

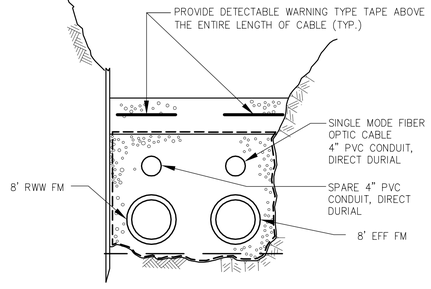

TRENCH DETAIL (S4, 00 E-002)
NTS

NOTES

1. SEE WWTF AND COLLECTION SYSTEM SCOPE DELINEATION TABLE ON SHEET 00 E-601 FOR FIBER NETWORK SCOPE
2. SEE WWTF AND EFFLUENT DISPOSAL CONTRACT FOR FIBER TRENCH SECTIONS S1, S2

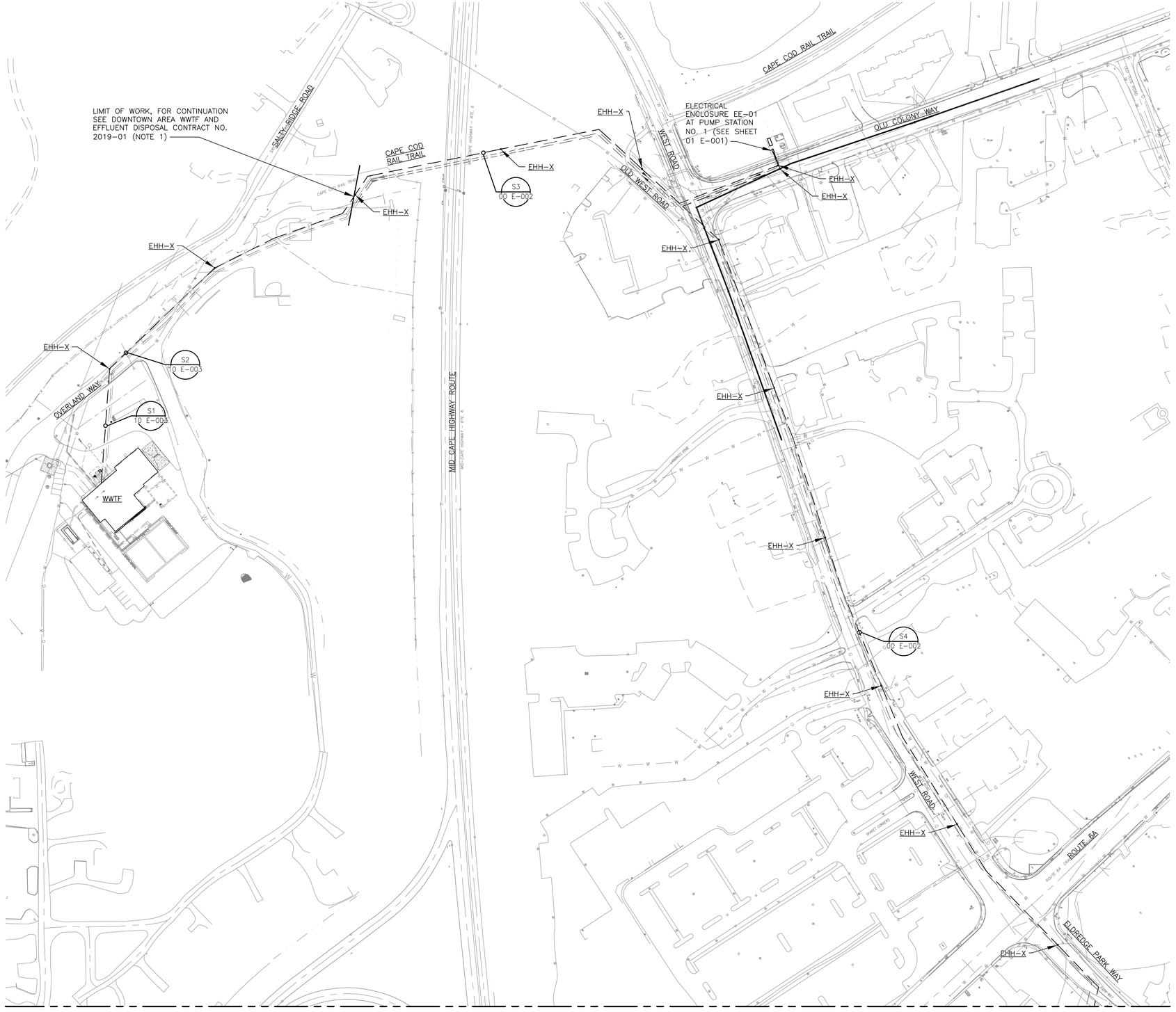

MATCHLINE A-A (FOR CONTINUATION SEE SHEET 00 E-003)

COLLECTION SYSTEMS AND PUMP STATIONS - ELECTRICAL SITE PLAN - FIBER NETWORK I
SCALE: 1"=100'-0"

1" = 100' SCALE: 0, 100, 200, 300 FEET

AECOM

PROJECT

DOWNTOWN AREA COLLECTION SYSTEM AND PUMP STATIONS

CONTRACT No. 2019-02
SRF No. 4486

OWNER

TOWN OF ORLEANS, MA
19 SCHOOL ROAD
ORLEANS, MA 02653
(508) 240-3700

ENGINEER

AECOM TECHNICAL SERVICES, INC.
9 JONATHAN BOURNE DRIVE
POCASSET, MA 02559
PHONE: (508) 833-6950
www.aecom.com

REGISTRATION

COMMONWEALTH OF MASSACHUSETTS
ANDREA ABRAHAM
ELECTRICAL
NO. 54966
REGISTERED PROFESSIONAL ENGINEER

01-24-2020

ISSUE/REVISION

I/R	DATE	DESCRIPTION

PROJECT NUMBER

60587515

Designed By:	A. ABRAHAM
Drawn By:	B. DESOUZA
Dept Check:	Y. RIZK
Proj Check:	T. PARECE
Date:	JANUARY 2020
Scale:	AS NOTED

DISCIPLINE

ELECTRICAL

SHEET TITLE

ELECTRICAL SITE PLAN - FIBER NETWORK I

SHEET NUMBER

00 E-002

Last saved by: BRENNO.DESOUZA(2020-01-24) Last Plotted: 2020-01-27
Filename: \\USCHLLFP001\DATA\PROJECTS\WAKEFIELD\DATA_3\PROJ\60476644 - ORLEANS DOWNTOWN PUMP STATION\SHEETS\E\00 E-002.DWG

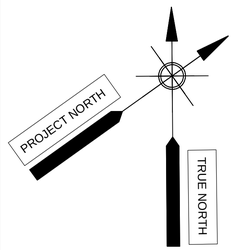

NOTES

1. SEE WWTF AND COLLECTION SYSTEM SCOPE DELINEATION TABLE ON SHEET 00 E-601 FOR FIBER NETWORK SCOPE
2. SEE WWTF AND EFFLUENT DISPOSAL CONTRACT FOR FIBER TRENCH SECTION S5

MATCHLINE A-A (FOR CONTINUATION SEE SHEET 00 E-002)

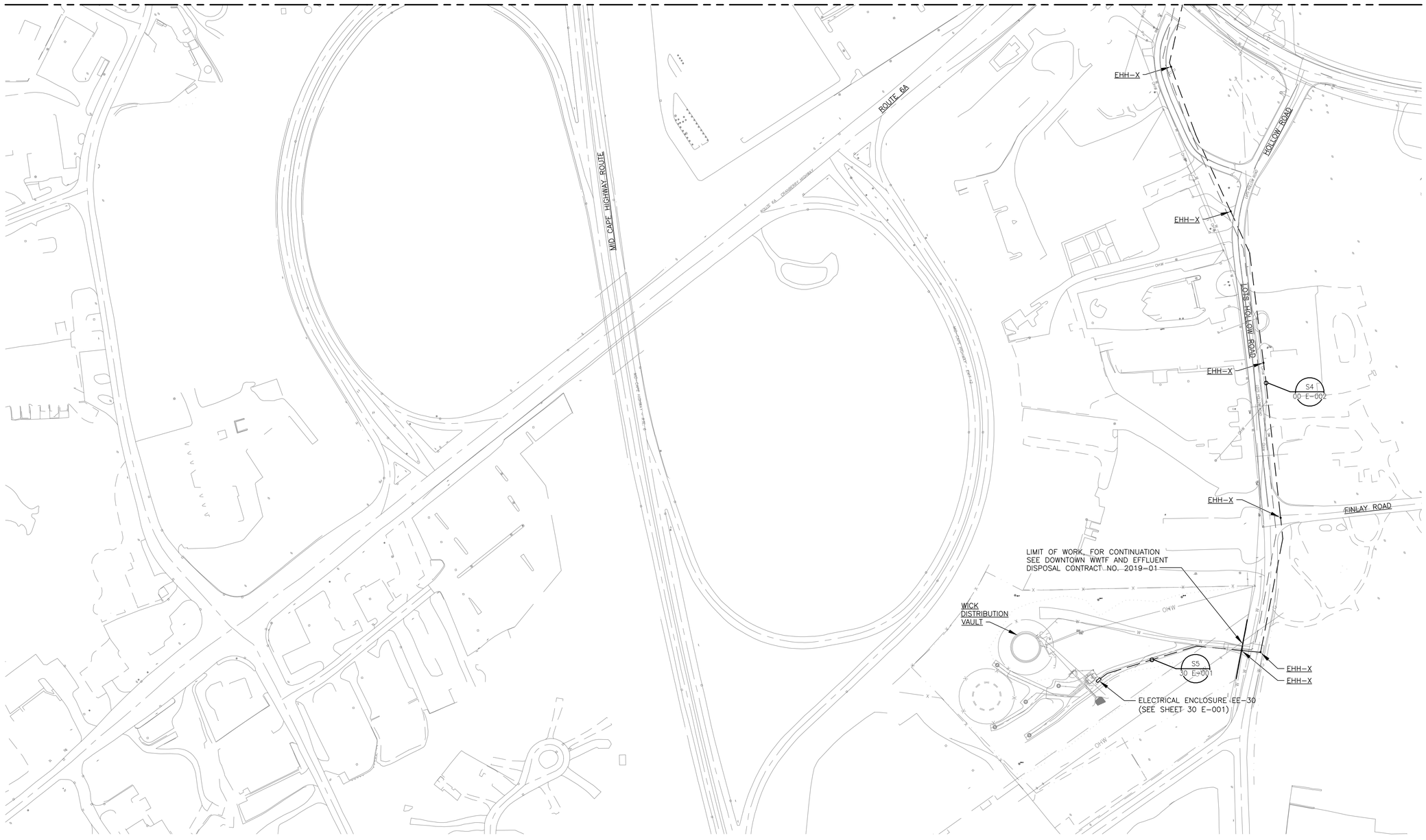

COLLECTION SYSTEMS AND PUMP STATIONS - ELECTRICAL SITE PLAN - FIBER NETWORK II

SCALE: 1"=100'-0"

1" = 100' SCALE 0 100 200 300 FEET

Last saved by: BRENNO.DESOUZA(2020-01-24) Last Plotted: 2020-01-27
Filename: \\USCHLLFP001\DATA\PROJECTS\WAKEFIELD\DATA_3\PROJ\60476644 - ORLEANS DOWNTOWN PUMP STATIONS\SHEETS\E00 E-003.DWG

AECOM

PROJECT

DOWNTOWN AREA COLLECTION SYSTEM AND PUMP STATIONS

CONTRACT No. 2019-02
SRF No. 4486

OWNER

TOWN OF ORLEANS, MA
19 SCHOOL ROAD
ORLEANS, MA 02653
(508) 240-3700

ENGINEER

AECOM TECHNICAL SERVICES, INC.
9 JONATHAN BOURNE DRIVE
POCASSET, MA 02559
PHONE: (508) 833-6950
www.aecom.com

REGISTRATION

COMMONWEALTH OF MASSACHUSETTS
ANDREA ABRAHAM
ELECTRICAL
NO. 54966
REGISTERED PROFESSIONAL ENGINEER

01-24-2020

ISSUE/REVISION

I/R	DATE	DESCRIPTION

PROJECT NUMBER

60587515

Designed By:	A. ABRAHAM
Drawn By:	B. DESOUZA
Dept Check:	Y. RIZK
Proj Check:	T. PARECE
Date:	JANUARY 2020
Scale:	AS NOTED

DISCIPLINE

ELECTRICAL

SHEET TITLE

ELECTRICAL SITE PLAN - FIBER NETWORK II

SHEET NUMBER

00 E-003

CONDUIT AND WIRE SCHEDULE

MEDIUM VOLTAGE POWER WIRING

[MV-1] 5"C, CABLE PROVIDED AND INSTALLED BY ELECTRICAL UTILITY.

LOW VOLTAGE POWER WIRING

[PA] 1"C, 2-12 AWG, 1-12 AWG (G)
[PA-4] 1"C, 4-12 AWG, 1-12 AWG (G)
[PA-6] 1"C, 6-12 AWG, 1-12 AWG (G)
[PB] 1"C, 3-12 AWG, 1-12 AWG (G)
[PC] 1C, 3-10 AWG, 1-10 AWG (G)
[PC-2] 1"C, 2-10 AWG, 1-10 AWG (G)
[PD] 1"C, 3-8 AWG, 1-10 AWG (G)
[PD-1] 1"C, 3-8 AWG, 1-10 AWG (G)
[PD-2] 1"C, 2-8 AWG, 1-10 AWG (G)
[PD-4] 1"C, 4-8 AWG, 1-10 AWG (G)
[PE] 1"C, 3-6 AWG, 1-10 AWG (G)
[PE-2] 1"C, 2-6 AWG, 1-10 AWG (G)
[PE-4] 1"C, 4-6 AWG, 1-10 AWG (G)
[PF] 1"C, 3-4 AWG, 1-10 AWG (G)
[PF-4] 1 1/2"C, 4-4 AWG, 1-10 AWG (G)
[PG] 1"C, 3-4 AWG, 1-8 AWG (G)
[PG-4] 1"C, 4-4 AWG, 1-8 AWG (G)
[PH] 1 1/4"C, 3-2 AWG, 1-8 AWG (G)
[PH-4] 1 1/2"C, 4-2 AWG, 1-8 AWG (G)
[PJ] 1 1/2"C, 3-1 AWG, 1-8 AWG (G)
[PJ-4] 1 1/2"C, 4-1 AWG, 1-8 AWG (G)
[PK] 1 1/2"C, 3-1 AWG, 1-6 AWG (G)
[PK-4] 1 1/2"C, 4-1 AWG, 1-6 AWG (G)
[PL] 1 1/2"C, 3-1/0 AWG, 1-6 AWG (G)
[PL-4] 1 1/2"C. 4-1/0 AWG, 1-6 AWG (G)
[PM] 1 1/2"C, 3-2/0 AWG, 1-6 AWG (G)
[PM-4] 2"C, 4-2/0 AWG, 1-6 AWG (G)
[PN] 2"C, 3-3/0 AWG, 1-6 AWG (G)
[PP] 2"C, 3-4/0 AWG, 1-4 AWG (G)
[PQ] 2 1/2"C, 3-250 KCM, 1-4 AWG (G)
[PR] 3"C, 3-350 KCM, 1-4 AWG(G)
[PS] 3"C, 3-350 KCM, 1-2 AWG(G)
[PT] 3"C, 3-500 KCM, 1-2 AWG(G)

SIGNAL WIRING

[D2] 3/4"C, 2-14 AWG, 1-14 AWG (G)
[D3] 3/4"C, 3-14 AWG, 1-14 AWG (G)
[D4] 3/4"C, 4-14 AWG, 1-14 AWG (G)
[D5] 3/4"C, 5-14 AWG, 1-14 AWG (G)
[D6] 3/4"C, 6-14 AWG, 1-14 AWG (G)
[D7] 3/4"C, 7-14 AWG, 1-14 AWG (G)
[D8] 3/4"C, 8-14 AWG, 1-14 AWG (G)
[D9] 3/4"C, 9-14 AWG, 1-14 AWG (G)
[D10] 3/4"C, 10-14 AWG, 1-14 AWG (G)
[D11] 1"C, 11-14 AWG, 1-14 AWG (G)
[D12] 1"C, 12-14 AWG, 1-14 AWG (G)
[D13] 1"C, 13-14 AWG, 1-14 AWG (G)
[D14] 1"C, 14-14 AWG, 1-14 AWG (G)
[D15] 1"C, 15-14 AWG, 1-14 AWG (G)
[D16] 1"C, 16-14 AWG, 1-14 AWG (G)
[D17] 1"C, 17-14 AWG, 1-14 AWG (G)
[D18] 1"C, 18-14 AWG, 1-14 AWG (G)
[D19] 1"C, 19-14 AWG, 1-14 AWG (G)
[D20] 1"C, 20-14 AWG, 1-14 AWG (G)
[D28] 1"C, 28-14 AWG, 1-14 AWG (G)
[D30] 1"C, 30-14 AWG, 1-14 AWG (G)
[D34] 1 1/2"C, 34-14 AWG, 1-14 AWG (G)
[D40] 1 1/2"C, 40-14 AWG, 1-14 AWG (G)

GROUND WIRING:

NOTE: ALL G SERIES WIRING SHALL BE CONNECTED TO GROUNDING BUS BAR LOCATED IN THE ELECTRICAL ROOM UNLESS OTHERWISE INDICATED. INSTALL IN PVC CONDUIT.

[G1] 1"C, 1-12 AWG (G)
[G2] 1"C, 1-10 AWG (G)
[G3] 1"C, 1-8 AWG (G)
[G4] 1C, 1-6 AWG (G)
[G5] 1"C, 1-4 AWG (G)
[G6] 1"C, 1-2 AWG (G)
[G7] 1"C, 1-1/0 AWG (G)
[G8] 1"C, 1-2/0 AWG (G)
[G9] 1 1/2"C, 1-3/0 AWG (G)
[G10] 1 1/2"C, 1-4/0 AWG (G)
[G11] 1 1/2"C, 1-250 KCM (G)
[G12] 2"C, 1-350 KCM (G)
[G13] 2"C, 1-500 KCM (G)

CONTROL WIRING

[VSC] 1"C, VENDOR SUPPLIED CABLE
[CX] 1" C, COAXIAL CABLE
[E1] 1"C, 1-CAT 6 CABLE
[E2] 1"C, 2-CAT 6 CABLES
[FO1] 1"C, 1-FIBER OPTIC MEDIA CABLE
[FO2] 1"C, 2-FIBER OPTIC MEDIA CABLES
[C1] 1"C, 1-TSP 16 AWG
[C2] 1"C, 2-TSP 16 AWG
[C3] 1"C, 3-TSP 16 AWG
[C4] 1 1/2"C, 4-TSP 16 AWG
[C5] 1 1/2"C, 5-TSP 16 AWG

CONDUIT AND WIRE SCHEDULE NOTES:

1. FOR CIRCUITS RUN IN DUCT BANKS, THE DUCT SIZE INDICATED ON THE DUCT BANK SCHEDULE GOVERNS THE CONDUIT SIZE IN THE DUCT BANK. CONDUIT SIZES SHOWN HERE GOVERNS CONDUIT SIZE WHEN NOT RUN IN DUCT BANK.

TABLE OF RESPONSIBILITY – FIBER NETWORK SCOPE FOR WWTF & COLLECTION SYSTEM CONTRACTS

	ELEMENT	COLLECTION SYSTEM/ PUMP STATIONS CONTRACT 2019-01	WWTF/EFFLUENT DISPOSAL CONTRACT 2019-02
1	FURNISH AND INSTALL FIBER OPTIC NETWORK CABLE		X
2	FURNISH AND INSTALL CONDUITS FOR FIBER CONNECTION FROM WWTF TO RT. 7 CROSSING (TRENCH SECTIONS S1, S2)		X
3	FURNISH AND INSTALL CONDUITS FOR FIBER CONNECTION FROM RT.7 CROSSING TO PS #1 (TRENCH SECTION S3)	X	
4	FURNISH AND INSTALL CONDUITS FOR FIBER CONNECTION FROM PUMP STATION #1 TO LOTS HOLLOW RD. (TRENCH SECTION S4)	X	
5	FURNISH AND INSTALL CONDUITS FOR FIBER CONNECTION FROM LOTS HOLLOW RD. TO WICK DIST. VAULT (TRENCH SECTION S5)		X

TABLE OF RESPONSIBILITY – ELECTRICAL, GENERAL, AND SYSTEM INTEGRATOR

	ELEMENT	GENERAL CONTRACTOR	SYSTEM INTEGRATOR	ELECTRICAL CONTRACTOR
1	FURNISH, TEST AND CALIBRATE INSTRUMENTS		X	
2	INSTALL INSTRUMENTS	X		
3	INSTALL FIELD LOCATED DEVICES ASSOCIATED WITH INSTRUMENTS INCLUDING TRANSMITTERS, INDICATORS, CONTROL PANELS, AND ANCIALLARY COMPONENTS THAT ARE NOT LOCATED WITHIN PROCESS PIPING AND TANKS. LOCATIONS SHALL BE AS INDICATED ON THE ELECTRICAL DRAWINGS.	X		
4	FURNISH RADIO SYSTEM HARDWARE		X	
5	INSTALL RADIO SYSTEM HARDWARE			X
4	FURNISH AND INSTALL INTERCONNECTING WIRE, CABLE, CONDUIT, AND CONNECTIONS FOR INSTRUMENTS			X
6	FURNISH AND INSTALL FIBER OPTIC NETWORK CABLE		X	

ENVIRONMENTAL CLASSIFICATIONS*

LOCATION	NEMA TYPE					HAZARDOUS CLASS 1 GROUP D**		REMARKS
	1	3R	4	4X	12	DIV. 1	DIV. 2	SEE BELOW
(01) - PUMP STATION NO.1								
WET WELL						x		R3
VALVE VAULT							x	R2
(02) - PUMP STATION NO.2								
WET WELL						x		R3
VALVE VAULT							x	R2
(03) - PUMP STATION NO.3								
WET WELL						x		R3
VALVE VAULT							x	R2
OUTDOORS (UNLESS OTHERWISE COVERED ABOVE)				x				R1

REMARKS:

* PROVIDE EQUIPMENT AND INSTALLATION TO COMPLY WITH AREA CLASSIFICATION REQUIREMENTS.

** RADIUS SHALL EXTEND TO ALL DIRECTIONS UNLESS SPECIFICALLY IDENTIFIED AS A HORIZONTAL OR VERTICAL RADIUS.

R1 = OUTDOORS ARE AREAS NOT ENCLOSED BY WALLS AND CEILING.

R2 = DRY WELL OR VAULT
CLASS 1 DIVISION 2 INSIDE VAULT
CLASS 1 DIVISION 2 WITHIN 0.9 M (3 FT) RADIUS FROM VENT
NEMA 4X AREA BEYOND CLASSIFIED RADIUS
SEE FIGURE R2 THIS SHEET.

R3 = WET WELL OR BASIN
CLASS 1 DIVISION 1 INSIDE WET WELL
CLASS 1 DIVISION 1 WITHIN 0.9 M (3 FT) RADIUS FROM VENT
CLASS 1 DIVISION 2 WITHIN 1.5 M (5 FT) RADIUS FROM VENT
CLASS 1 DIVISION 2 WITHIN 0.9 M (3 FT) HORIZONTAL RADIUS FROM HATCH
CLASS 1 DIVISION 2 WITHIN 1.5 M (5 FT) VERTICAL RADIUS FROM HATCH
NEMA 4X AREA BEYOND CLASSIFIED RADIUS
SEE FIGURE R3 THIS SHEET.

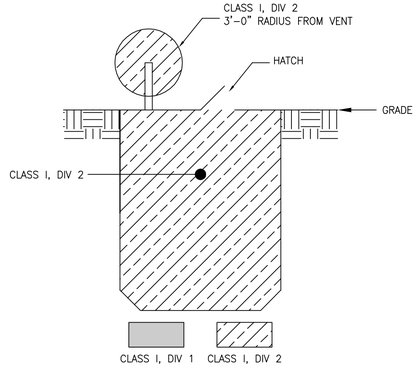

R2
DRY WELL OR VAULT
CLASSIFICATION DETAIL

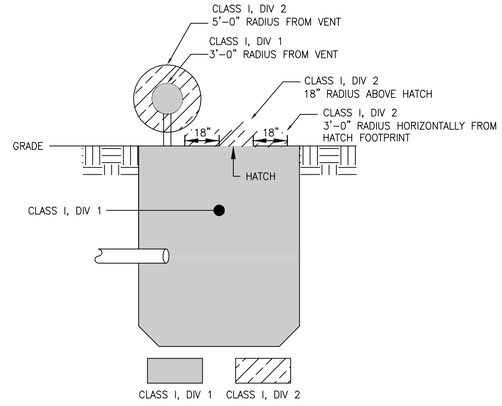

R3
WET WELL OR BASIN
CLASSIFICATION DETAIL

AECOM

PROJECT

DOWNTOWN AREA COLLECTION SYSTEM AND PUMP STATIONS

CONTRACT No. 2019-02
SRF No. 4486

OWNER

TOWN OF ORLEANS, MA
19 SCHOOL ROAD
ORLEANS, MA 02653
(508) 240-3700

ENGINEER

AECOM TECHNICAL SERVICES, INC.
9 JONATHAN BOURNE DRIVE
POCASSET, MA 02559
PHONE: (508) 833-6950
www.aecom.com

REGISTRATION

COMMONWEALTH OF MASSACHUSETTS
ANDREA ABRAHAM
ELECTRICAL
NO. 54966
REGISTERED
PROFESSIONAL ENGINEER

01-24-2020

ISSUE/REVISION

I/R	DATE	DESCRIPTION

PROJECT NUMBER

60587515

Designed By:	A. ABRAHAM
Drawn By:	A. ABRAHAM
Dept Check:	Y. RIZK
Proj Check:	T. PARECE
Date:	JANUARY 2020
Scale:	AS NOTED

DISCIPLINE

ELECTRICAL

SHEET TITLE

ELECTRICAL SCHEDULES I

SHEET NUMBER

00 E-601

Last saved by: ASPESID(2020-01-15) Last Plotted: 2020-01-27
Filename: \\USCHL1FP001\DATA\PROJECTS\WAKEFIELD\DATA_3\PRO\60476644 - ORLEANS DOWNTOWN PUMP STATIONS\SHEETS\E00 E-601.DWG

NOTES:

1. PROVIDE ELECTRICAL SERVICE IN ACCORDANCE WITH EVERSOURCE REQUIREMENTS.

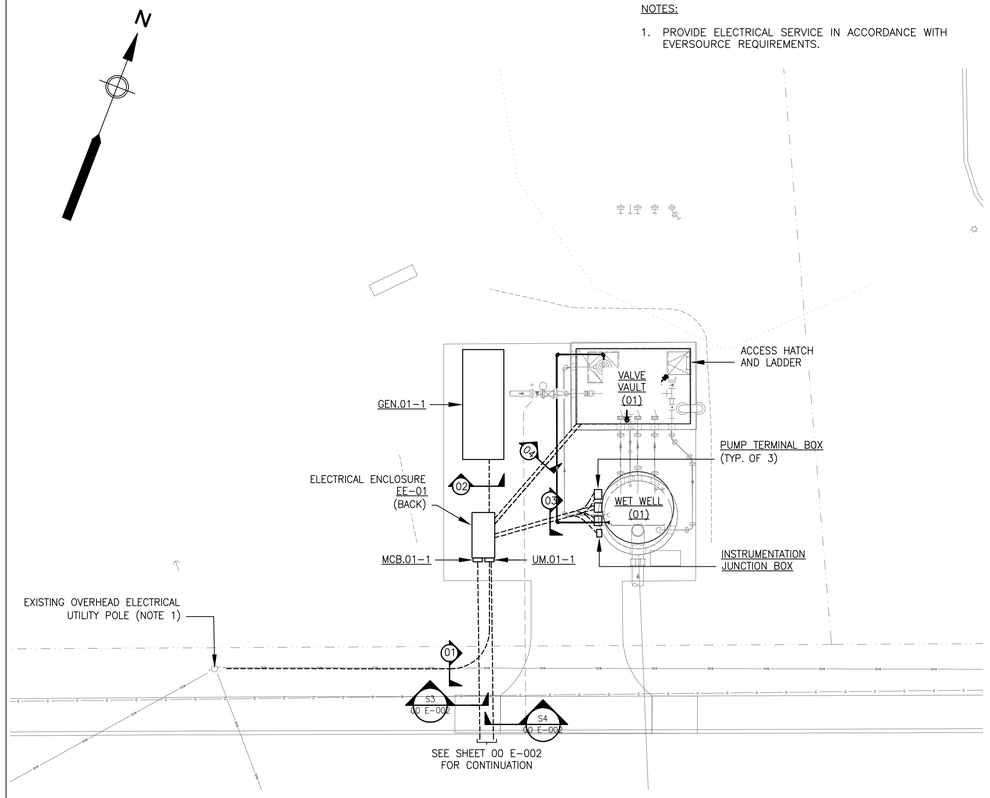

PUMP STATION NO.1 - ELECTRICAL SITE PLAN

(SCALE: 1"= 10'-0")

0 10 20 30
1" = 10' SCALE FEET

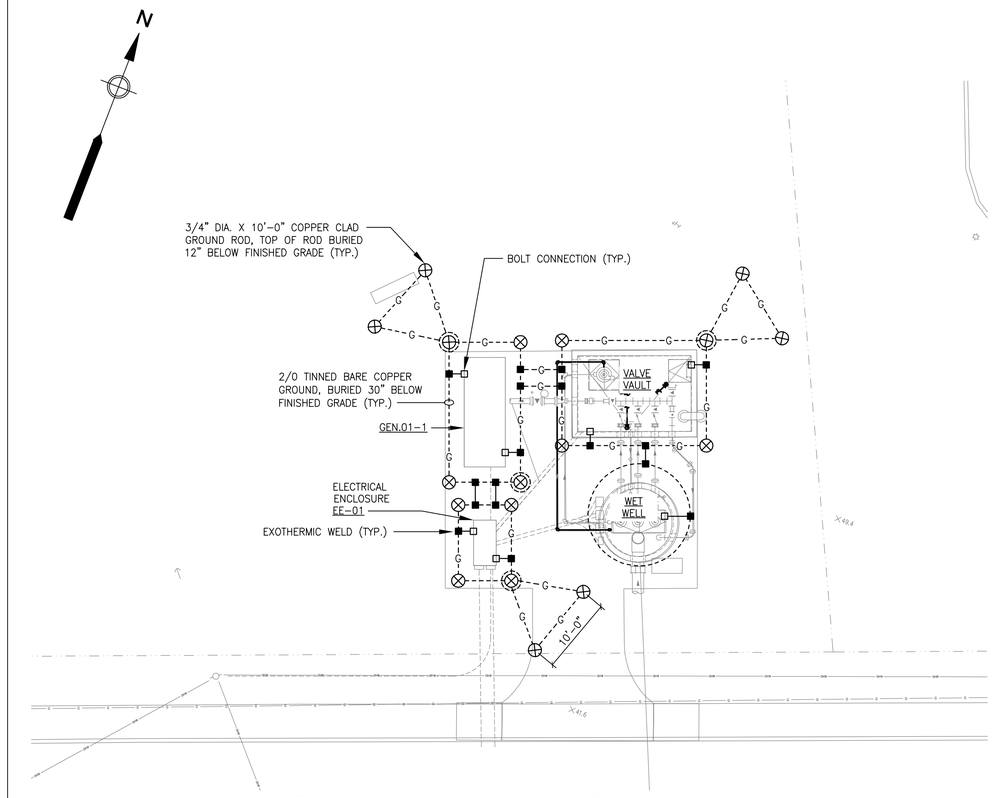

PUMP STATION NO.1 - GROUNDING PLAN

(SCALE: 1"= 10'-0")

0 10 20 30
1" = 10' SCALE FEET

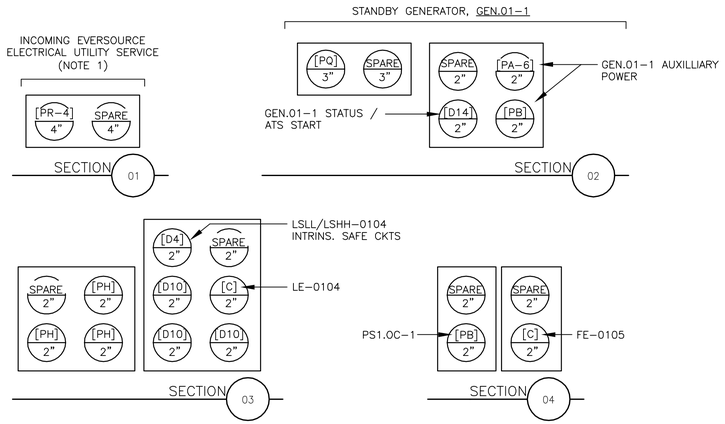

PUMP STATION NO.1 - DUCT BANK SECTIONS

(SCALE:NTS)

AECOM

PROJECT

DOWNTOWN AREA COLLECTION SYSTEM AND PUMP STATIONS

CONTRACT No. 2019-02
SRF No. 4486

OWNER

TOWN OF ORLEANS, MA
19 SCHOOL ROAD
ORLEANS, MA 02653
(508) 240-3700

ENGINEER

AECOM TECHNICAL SERVICES, INC.
9 JONATHAN BOURNE DRIVE
POCASSET, MA 02559
PHONE: (508) 833-6950
www.aecom.com

REGISTRATION

COMMONWEALTH OF MASSACHUSETTS
ANDRE ABRAHAM
ELECTRICAL
NO. 54966
REGISTERED
PROFESSIONAL ENGINEER

01-24-2020

ISSUE/REVISION

I/R	DATE	DESCRIPTION

PROJECT NUMBER

60587515

Designed By:	A. ABRAHAM
Drawn By:	A. ABRAHAM
Dept Check:	Y, RIZK
Proj Check:	T. PARECE
Date:	JANUARY 2020
Scale:	AS NOTED

DISCIPLINE

ELECTRICAL

SHEET TITLE

PUMP STATION NO.1 - ELECTRICAL SITE PLAN

SHEET NUMBER

01 E-001

Last saved by: ASPESID(2020-01-15) Last Plotted: 2020-01-27
Filename: \\USCHLLFP001\DATA\PROJECTS\WAKEFIELD\DATA_3\PROJ\60476644 - ORLEANS DOWNTOWN PUMP STATION\SHEETS\E01 E-001.DWG

LEGEND:

[1] PUMP STATION NO.1 PLC

NOTES

1. PROVIDE ELECTRICAL UTILITY SERVICE IN ACCORDANCE WITH EVERSOURCE REQUIREMENTS.

PRIMARY: 480VAC, 3PH, 60HZ
TRANSFORMER: 15KVA
SECONDARY: 208/120V, 3PH, 4W, 60HZ

PANELBOARD "MPC.01-1"

MAIN CIRCUIT BREAKER: 30A TRIP
SHORT CIRCUIT BRACING: 10,000 AMPS
CABINET: NEMA 1

GROUND BUS

LOCATION	HP	KVA A	KVA B	KVA C	CIR. NO.	NEUTRAL A B C	CIR. NO.	KVA A	KVA B	KVA C	HP	LOCATION
WW.PS-1-PLC	–	0.60	–	–	1		2	0.12	–	–	–	ELECTRICAL CABINET FLOOD LIGHT
FLOW METER FIT-0105	–	–	0.12	–	3		4	–	0.36	–	–	GEN.01-1 BATTERY CHARGER
ELECTRICAL CABINET RECEPT.	–	–	–	0.36	5		6	–	–	0.50	–	GEN.01-1 MISC. HEATER
ELECTRICAL CABINET LIGHTING	–	0.20	–	–	7		8	0.50	–	–	–	GEN.01-1 MISC. HEATER
AUTODIALER	–	–	0.24	–	9		10	–	0.75	–	–	GEN.01-1 MISC. HEATER
ELECTRICAL CABINET HEATER	–	–	–	0.50	11		12	–	–	0.75		
AIR CONDITIONER	–	0.50	–	–	13		14	–	–	–	–	SPARE
SPARE	–	–	–	–	15		16	–	–	–	–	SPARE
SPARE	–	–	–	–	17		18	–	–	–	–	SPARE

KVA PH A: 1.92 KVA PH B: 1.47 KVA PH C: 2.11 KVA

TOTAL CONNECTED LOAD: 5.50 KVA

ALL BRANCH C/B 100 AMP FRAME 20 AMP TRIP (UNLESS OTHERWISE NOTED)

PANEL LOCATION: ELECTRICAL CABINET EE-01

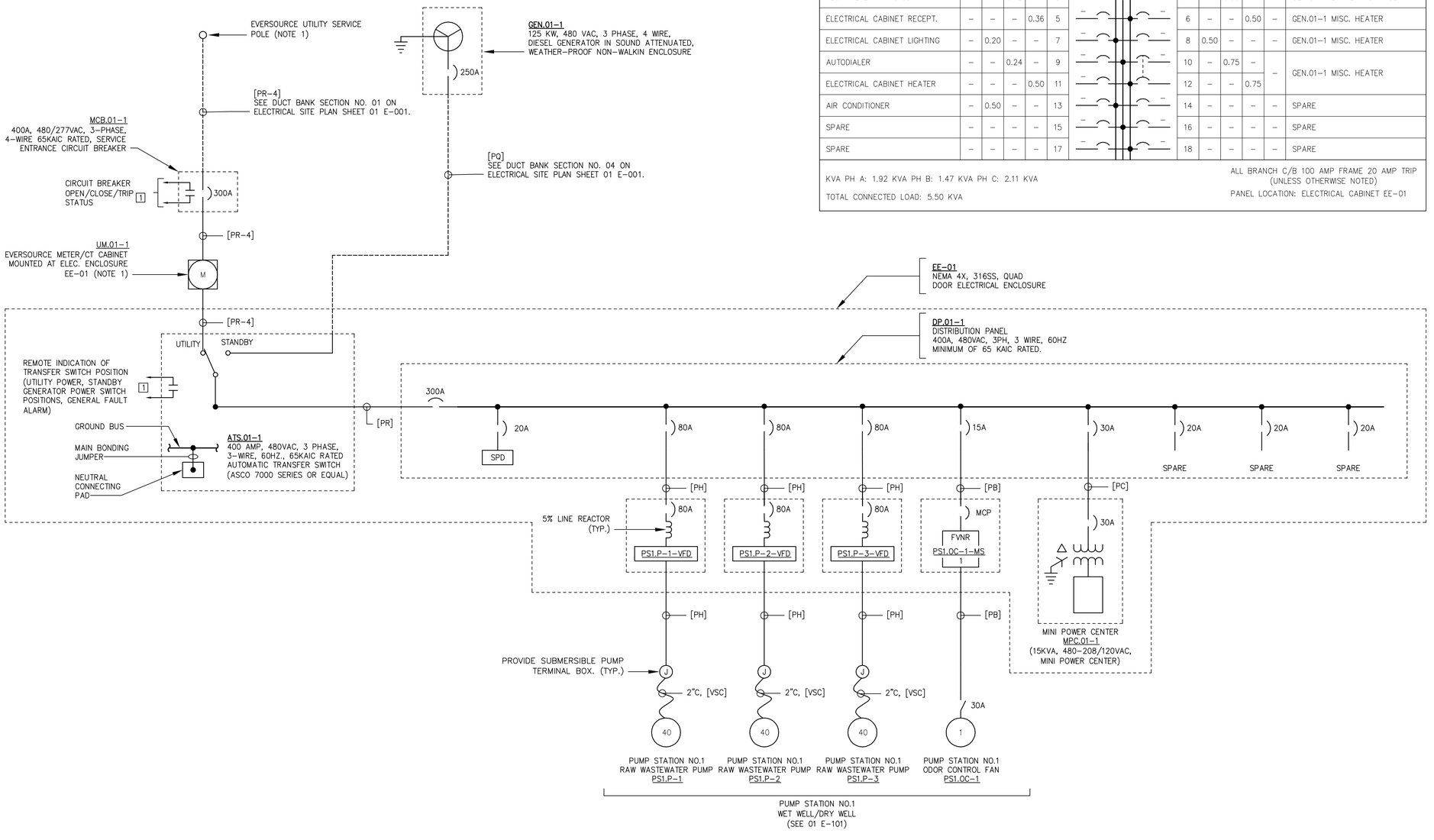

PUMP STATION NO.1 – SINGLE LINE DIAGRAM

AECOM

PROJECT

DOWNTOWN AREA COLLECTION SYSTEM AND PUMP STATIONS

CONTRACT No. 2019-02
SRF No. 4486

OWNER

TOWN OF ORLEANS, MA
19 SCHOOL ROAD
ORLEANS, MA 02653
(508) 240-3700

ENGINEER

AECOM TECHNICAL SERVICES, INC.
9 JONATHAN BOURNE DRIVE
POCASSET, MA 02559
PHONE: (508) 833-6950
www.aecom.com

REGISTRATION

COMMONWEALTH OF MASSACHUSETTS
ANDREA ABRAHAM
ELECTRICAL
NO. 54966
REGISTERED
PROFESSIONAL ENGINEER

01-24-2020

ISSUE/REVISION

I/R	DATE	DESCRIPTION

PROJECT NUMBER

60587515

Designed By:	A. ABRAHAM
Drawn By:	A. ABRAHAM
Dept Check:	Y. RIZK
Proj Check:	T. PARECE
Date:	JANUARY 2020
Scale:	AS NOTED

DISCIPLINE

ELECTRICAL

SHEET TITLE

PUMP STATION NO.1 - ELECTRICAL SINGLE LINE DIAGRAM

SHEET NUMBER

01 E-002

Last saved by: ASPESID(2020-01-15) Last Plotted: 2020-01-27
Filename: \\USCHL1FP001\DATA\PROJECTS\WAKEFIELD\DATA_3\PROJ\60476644 - ORLEANS DOWNTOWN PUMP STATIONS\SHEETS\E\01 E-002.DWG

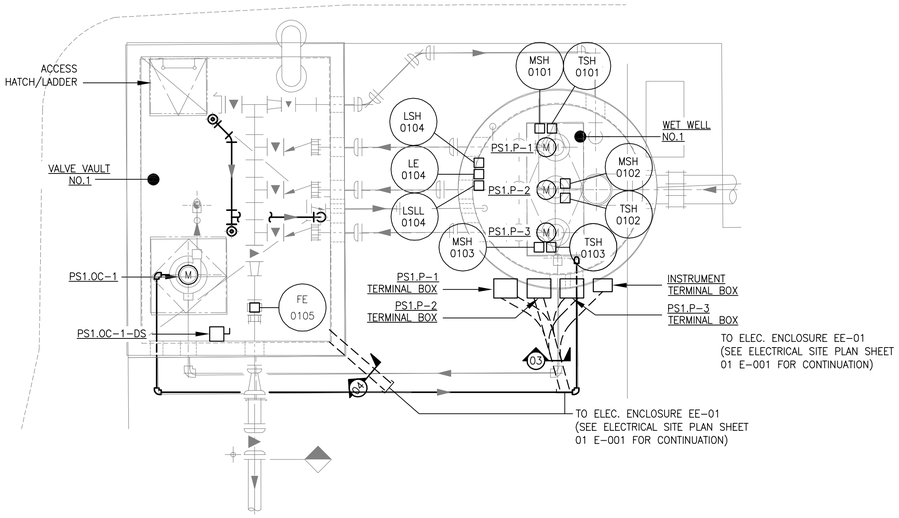

PUMP STATION NO.1 - PLAN VIEW

(SCALE: 1/4" = 1'-0")

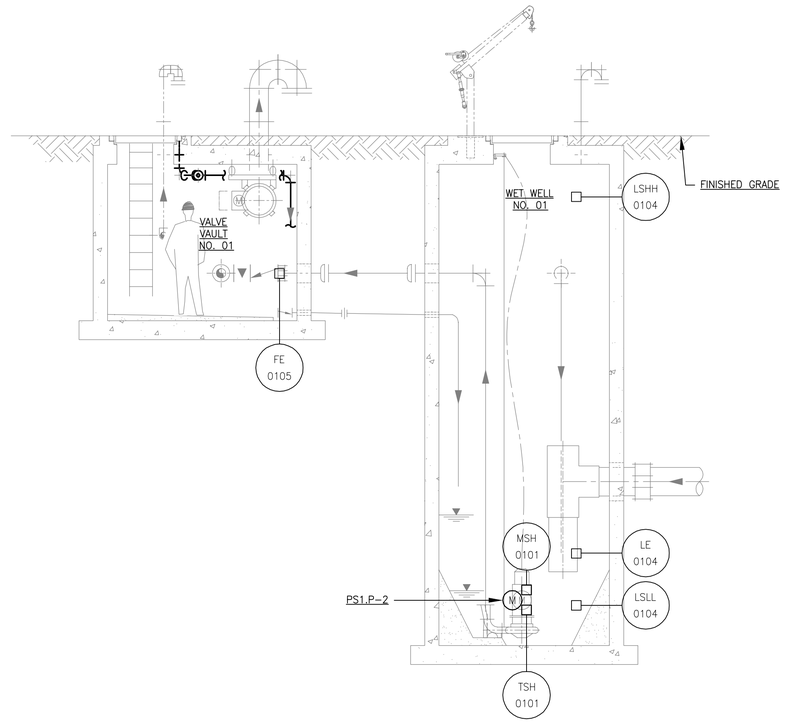

PUMP STATION NO.1 - SECTION VIEW

(SCALE: 1/4" = 1'-0")

1/4"=1'-0" SCALE 0 4 8 12 FEET

AECOM

PROJECT

DOWNTOWN AREA COLLECTION SYSTEM AND PUMP STATIONS

CONTRACT No. 2019-02
SRF No. 4486

OWNER

TOWN OF ORLEANS, MA
19 SCHOOL ROAD
ORLEANS, MA 02653
(508) 240-3700

ENGINEER

AECOM TECHNICAL SERVICES, INC.
9 JONATHAN BOURNE DRIVE
POCASSET, MA 02559
PHONE: (508) 833-6950
www.aecom.com

REGISTRATION

COMMONWEALTH OF MASSACHUSETTS
ANDREA ABRAHAM
ELECTRICAL
NO. 54966
REGISTERED PROFESSIONAL ENGINEER

01-24-2020

ISSUE/REVISION

I/R	DATE	DESCRIPTION

PROJECT NUMBER

60587515

Designed By:	**A. ABRAHAM**
Drawn By:	**A. ABRAHAM**
Dept Check:	**Y. RIZK**
Proj Check:	**T. PARECE**
Date:	**JANUARY 2020**
Scale:	**AS NOTED**

DISCIPLINE

ELECTRICAL

SHEET TITLE

PUMP STATION NO.1 - ELECTRICAL POWER PLAN

SHEET NUMBER

01 E-101

Last saved by: ASPESID (2020-01-15) Last Plotted: 2020-01-27
Filename: I:\USCHL1\FP0010\DATA\PROJECTS\WAKEFIELDDATA_3\PROJ\60476644 - ORLEANS DOWNTOWN PUMP STATIONS\SHEETS\E01 E-101.DWG

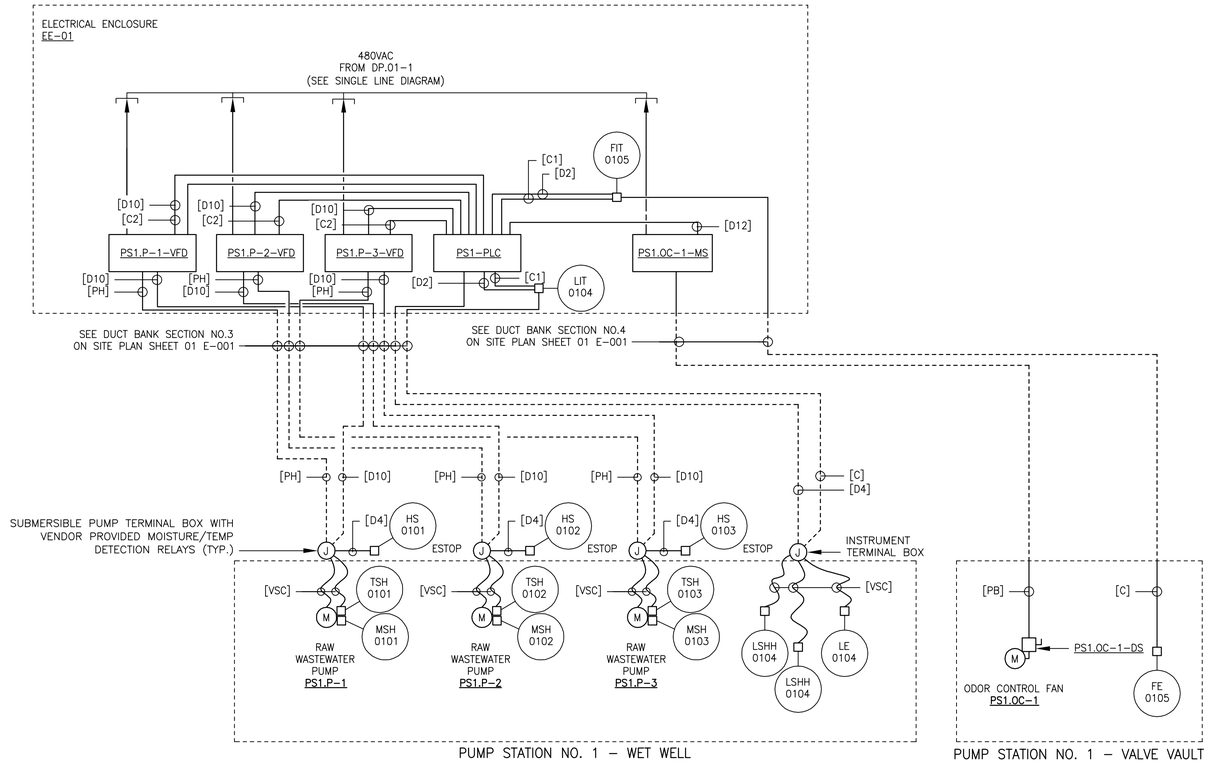

PUMP STATION NO.1 – WET WELL AND VALVE VAULT – RISER DIAGRAMS

SCALE: NTS

Last saved by: ASPESID(2020-01-15) Last Plotted: 2020-01-27
Filename: \\USCHLIFP001\DATA\PROJECTS\WAKEFIELD\DATA_3\PROJ\60476644 - ORLEANS DOWNTOWN PUMP STATIONS\SHEETS\E01 E-601.DWG

AECOM

PROJECT

DOWNTOWN AREA
COLLECTION SYSTEM
AND PUMP STATIONS

CONTRACT No. 2019-02
SRF No. 4486

OWNER

TOWN OF ORLEANS, MA

19 SCHOOL ROAD
ORLEANS, MA 02653
(508) 240-3700

ENGINEER

AECOM TECHNICAL SERVICES, INC.
9 JONATHAN BOURNE DRIVE
POCASSET, MA 02559
PHONE: (508) 833-6950
www.aecom.com

REGISTRATION

COMMONWEALTH OF MASSACHUSETTS
ANDREA ABRAHAM
ELECTRICAL
NO. 54966
REGISTERED
PROFESSIONAL ENGINEER

01-24-2020

ISSUE/REVISION

I/R	DATE	DESCRIPTION

PROJECT NUMBER

60587515

Designed By:	**A. ABRAHAM**
Drawn By:	**A. ABRAHAM**
Dept Check:	**Y. RIZK**
Proj Check:	**T. PARECE**
Date:	**JANUARY 2020**
Scale:	**AS NOTED**

DISCIPLINE

ELECTRICAL

SHEET TITLE

PUMP STATION NO.1 - ELECTRICAL RISER DIAGRAMS

SHEET NUMBER

01 E-601

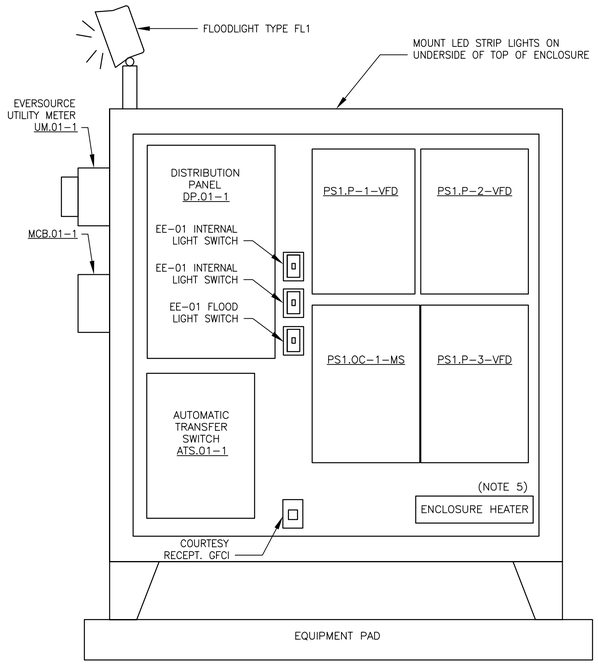

EE-01 – ENCLOSURE LAYOUT – FRONT

SCALE: NTS

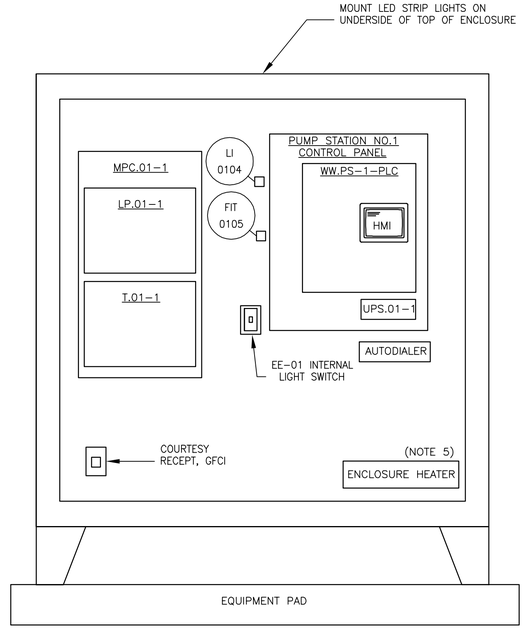

EE-01 – ENCLOSURE LAYOUT – BACK

SCALE: NTS

NOTES:

1. PROVIDE ENCLOSURE CONSTRUCTED OF 316 STAINLESS STEEL.
2. COMPONENT LAYOUT IS FOR FUNCTIONAL PURPOSES ONLY. LAYOUT SHALL BE FINALIZED BY ELECTRICAL CONTRACTOR BASED ON SPECIFIC EQUIPMENT MANUFACTURERS AND MODELS SELECTED.
3. SYSTEM INTEGRATOR TO PURCHASE RADIO EQUIPMENT, PLC AND INSTRUMENTS. ELECTRICAL CONTRACTOR SHALL INSTALL EQUIPMENT IN ACCORDANCE WITH MANUFACTURER REQUIREMENTS.
4. PANEL LAYOUT SHOWN WITH DOORS REMOVED.
5. PROVIDE HEATER SIZED TO MAINTAIN MINIMUM TEMPERATURE AS REQUIRED BY ALL COMPONENTS INSIDE ELECTRICAL ENCLOSURE. PROVIDE HEATER CONTROLLED BY AN ADJUSTABLE THERMOSTAT.
6. PROVIDE CONNECTION FOR GENERATOR IN ACCORDANCE WITH THE CITY OF MIDDLETOWN STANDARDS. COORDINATE WITH THE WATER DEPARTMENT ELECTRICIAN.
7. PROVIDE CLOSED LOOP AIR CONDITIONING AS NEEDED TO MAINTAIN TEMPERATURE WITHIN EQUIPMENT RATINGS. AIR CONDITIONER SHALL BE NEMA 4X STAINLESS STEEL WITH CORROSION PACKAGE.

EE-01 – ENCLOSURE LAYOUTS

SCALE: NTS

Last saved by: ABRAHAMA(2020-01-23) Last Plotted: 2020-01-27
Filename: \\USCHL1FP001\DATA\PROJECTS\WAKEFIELD\DATA_3\PROJ\60476644 - ORLEANS DOWNTOWN PUMP STATIONS\SHEETS\EE01 E-602.DWG

AECOM

PROJECT

DOWNTOWN AREA COLLECTION SYSTEM AND PUMP STATIONS

CONTRACT No. 2019-02
SRF No. 4486

OWNER

TOWN OF ORLEANS, MA

19 SCHOOL ROAD
ORLEANS, MA 02653
(508) 240-3700

ENGINEER

AECOM TECHNICAL SERVICES, INC.
9 JONATHAN BOURNE DRIVE
POCASSET, MA 02559
PHONE: (508) 833-6950
www.aecom.com

REGISTRATION

COMMONWEALTH OF MASSACHUSETTS
ANDREA ABRAHAM
ELECTRICAL
NO. 54966
REGISTERED
PROFESSIONAL ENGINEER

01-24-2020

ISSUE/REVISION

I/R	DATE	DESCRIPTION

PROJECT NUMBER

60587515

Designed By:	**A. ABRAHAM**
Drawn By:	**A. ABRAHAM**
Dept Check:	**Y, RIZK**
Proj Check:	**T. PARECE**
Date:	**JANUARY 2020**
Scale:	**AS NOTED**

DISCIPLINE

ELECTRICAL

SHEET TITLE

PUMP STATION NO.1 - EE-01 ELEVATION

SHEET NUMBER

01 E-602

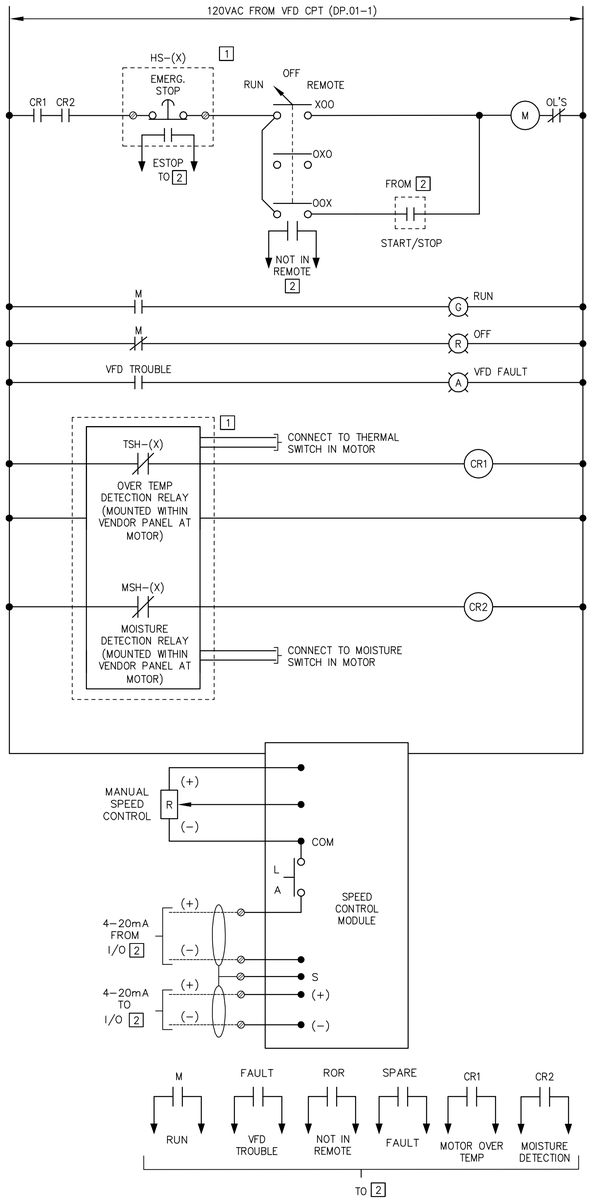

PUMP STATION NO.1
RAW WASTEWATER PUMP VFD
WIRING DIAGRAM
PS1.P-1-VFD

(ALL COMPONENTS LOCATED AT VFD UNLESS OTHERWISE NOTED)
(TYPICAL OF PS1.P-2, PS1.P-3)

EQUIP. TAG (X)	HS-(X)	TSH-(X)	MSH-(X)
PS1.P-1-VFD	0101	0101	0101
PS1.P-2-VFD	0102	0102	0102
PS1.P-3-VFD	0103	0103	0103

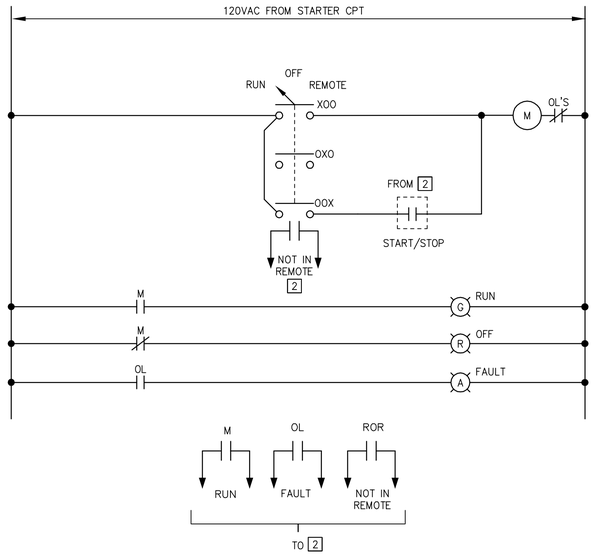

ODOR CONTROL FAN PS1.OC-1
MOTOR STARTER WIRING DIAGRAM

(ALL COMPONENTS LOCATED AT STARTER UNLESS OTHERWISE NOTED)

LEGEND

1 DEVICE LOCATED AT EQUIPMENT

2 FROM/TO WW.PS-1-PLC

Last saved by: ASPESID(2020-01-15) Last Plotted: 2020-01-27
Filename: \\USCHLLFP001\DATA\PROJECTS\WAKEFIELD\DATA_3\PRO\J60476644 - ORLEANS DOWNTOWN PUMP STATIONS\SHEETS\E\01 E-603.DWG

AECOM

PROJECT

DOWNTOWN AREA COLLECTION SYSTEM AND PUMP STATIONS

CONTRACT No. 2019-02
SRF No. 4486

OWNER

TOWN OF ORLEANS, MA
19 SCHOOL ROAD
ORLEANS, MA 02653
(508) 240-3700

ENGINEER

AECOM TECHNICAL SERVICES, INC.
9 JONATHAN BOURNE DRIVE
POCASSET, MA 02559
PHONE: (508) 833-6950
www.aecom.com

REGISTRATION

COMMONWEALTH OF MASSACHUSETTS
ANDRE ABRAHAM
ELECTRICAL
NO. 54966
REGISTERED
PROFESSIONAL ENGINEER

01-24-2020

ISSUE/REVISION

I/R	DATE	DESCRIPTION

PROJECT NUMBER

60587515

Designed By:	A. ABRAHAM
Drawn By:	A. ABRAHAM
Dept Check:	Y., RIZK
Proj Check:	T. PARECE
Date:	JANUARY 2020
Scale:	AS NOTED

DISCIPLINE

ELECTRICAL

SHEET TITLE

PUMP STATION NO.1 - WIRING SCHEMATICS

SHEET NUMBER

01 E-603

NOTES:

1. PROVIDE ELECTRICAL UTILITY SERVICE IN ACCORDANCE WITH EVERSOURCE REQUIREMENTS.

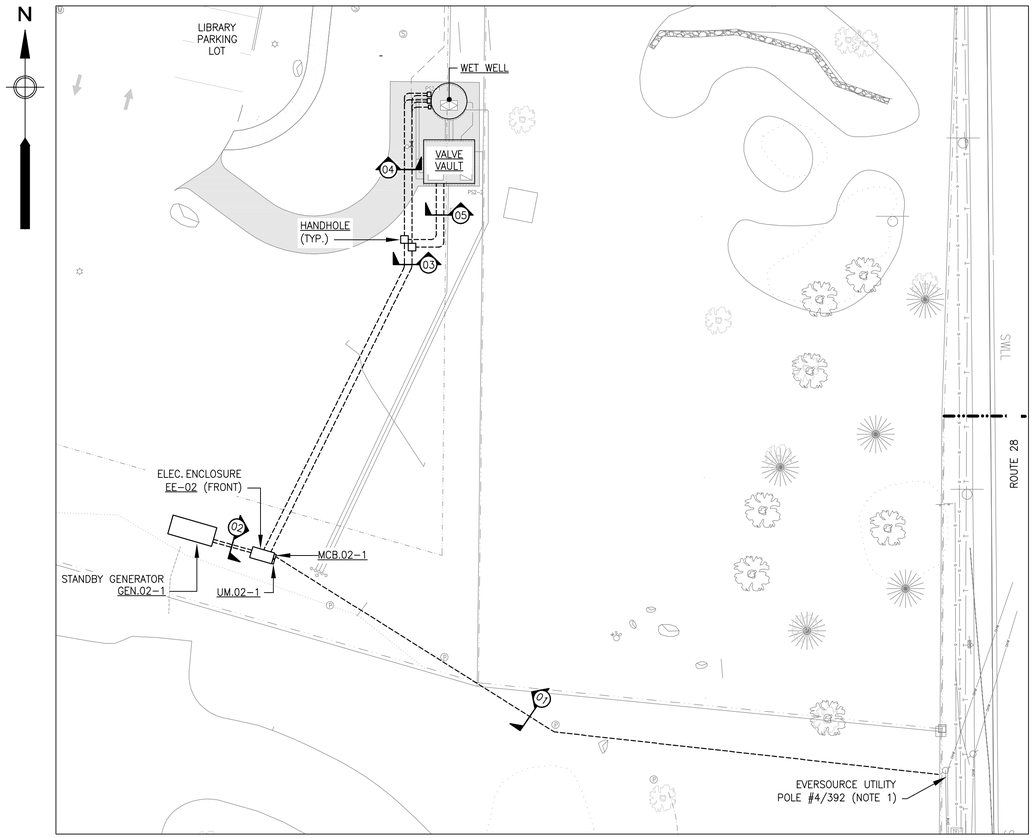

PUMP STATION NO.2 - ELECTRICAL SITE PLAN
(SCALE: 1"= 20'-0")

1" = 20' SCALE 0 20 40 60 FEET

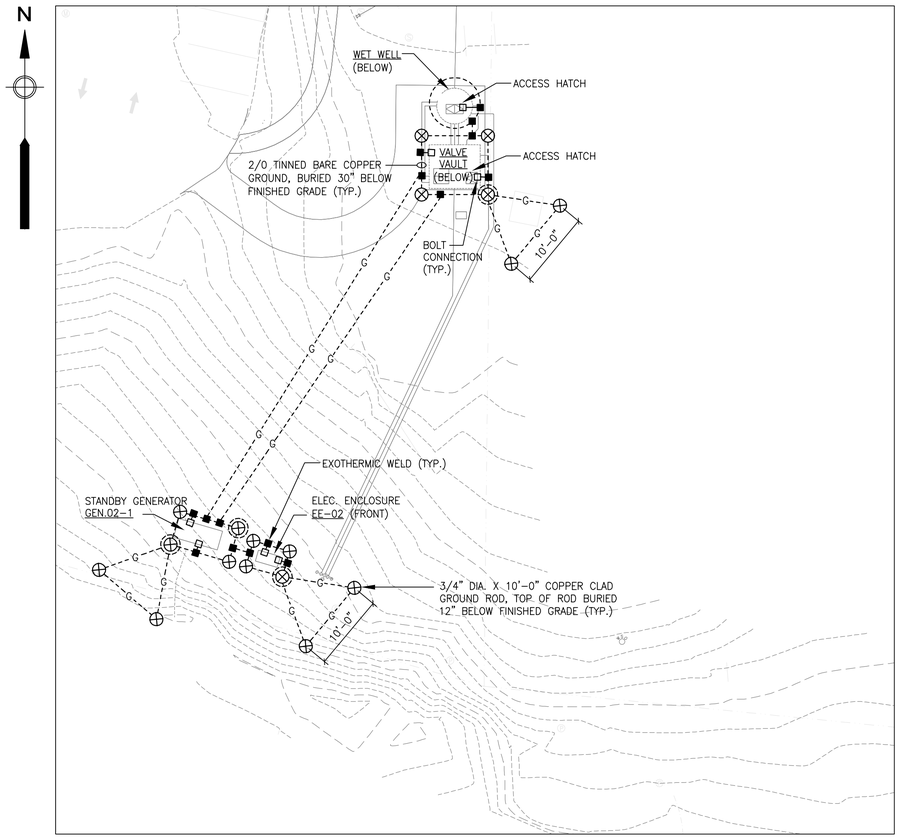

PUMP STATION NO.2 - ELECTRICALGROUNDING PLAN
(SCALE: 1"= 20'-0")

1" = 20' SCALE 0 20 40 60 FEET

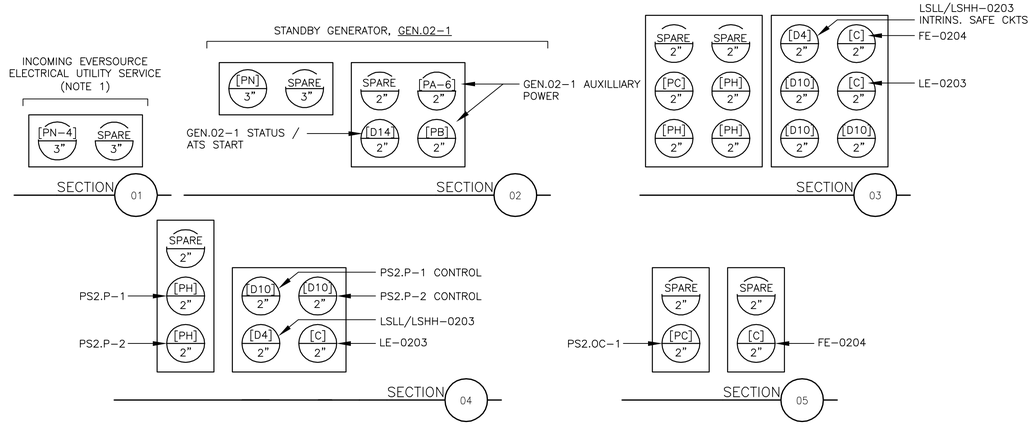

PUMP STATION NO.2 - DUCT BANK SECTIONS
(SCALE:NTS)

Last saved by: ASPESID(2020-01-15) Last Plotted: 2020-01-27
Filename: \\USCHL1FP001\DATA\PROJECTS\WAKEFIELD\DATA_3\PROJ\60476644 - ORLEANS DOWNTOWN PUMP STATION\SHEETS\IE\02 E-001.DWG

AECOM

PROJECT

DOWNTOWN AREA COLLECTION SYSTEM AND PUMP STATIONS

CONTRACT No. 2019-02
SRF No. 4486

OWNER

TOWN OF ORLEANS, MA
19 SCHOOL ROAD
ORLEANS, MA 02653
(508) 240-3700

ENGINEER

AECOM TECHNICAL SERVICES, INC.
9 JONATHAN BOURNE DRIVE
POCASSET, MA 02559
PHONE: (508) 833-6950
www.aecom.com

REGISTRATION

COMMONWEALTH OF MASSACHUSETTS
ANDREW J. ABRAHAM
ELECTRICAL
NO. 54966
REGISTERED
PROFESSIONAL ENGINEER

01-24-2020

ISSUE/REVISION

I/R	DATE	DESCRIPTION

PROJECT NUMBER

60587515

Designed By:	A. ABRAHAM
Drawn By:	A. ABRAHAM
Dept Check:	Y. RIZK
Proj Check:	T. PARECE
Date:	JANUARY 2020
Scale:	AS NOTED

DISCIPLINE

ELECTRICAL

SHEET TITLE

PUMP STATION NO.2 - ELECTRICAL SITE PLAN

SHEET NUMBER

02 E-001

LEGEND:

[1] PUMP STATION NO.2 PLC

NOTES

1. PROVIDE ELECTRICAL UTILITY SERVICE AND METERING EQUIPMENT IN ACCORDANCE WITH EVERSOURCE REQUIREMENTS.

PANELBOARD "MPC.02-1"

PRIMARY: 480VAC, 3PH, 60HZ
TRANSFORMER: 15KVA
SECONDARY: 208/120V, 3PH, 4W, 60HZ

MAIN CIRCUIT BREAKER: 30A TRIP
SHORT CIRCUIT BRACING: 10,000 AMPS
CABINET: NEMA 1

GROUND BUS

LOCATION	HP	KVA A	KVA B	KVA C	CIR. NO.	NEUTRAL A B C	CIR. NO.	KVA A	KVA B	KVA C	HP	LOCATION
WW.PS-2-PLC	–	0.60	–	–	1		2	0.12	–	–	–	ELECTRICAL CABINET FLOOD LIGHT
FLOW METER FIT-0204	–	–	0.12	–	3		4	–	0.36	–	–	GEN.02-1 BATTERY CHARGER
ELECTRICAL CABINET RECEPT.	–	–	–	0.36	5		6	–	–	0.50	–	GEN.02-1 MISC. HEATER
ELECTRICAL CABINET LIGHTING	–	0.20	–	–	7		8	0.50	–	–	–	GEN.02-1 MISC. HEATER
AUTODIALER	–	–	0.24	–	9		10	–	0.75	–	–	GEN.02-1 MISC. HEATER
ELECTRICAL CABINET HEATER	–	–	–	0.50	11		12	–	–	0.75		
AIR CONDITIONER	–	0.50	–	–	13		14	–	–	–	–	SPARE
SPARE	–	–	–	–	15		16	–	–	–	–	SPARE
SPARE	–	–	–	–	17		18	–	–	–	–	SPARE

KVA PH A: 1.92 KVA PH B: 1.47 KVA PH C: 2.11 KVA

TOTAL CONNECTED LOAD: 5.50 KVA

ALL BRANCH C/B 100 AMP FRAME 20 AMP TRIP (UNLESS OTHERWISE NOTED)

PANEL LOCATION: ELECTRICAL CABINET EE-02

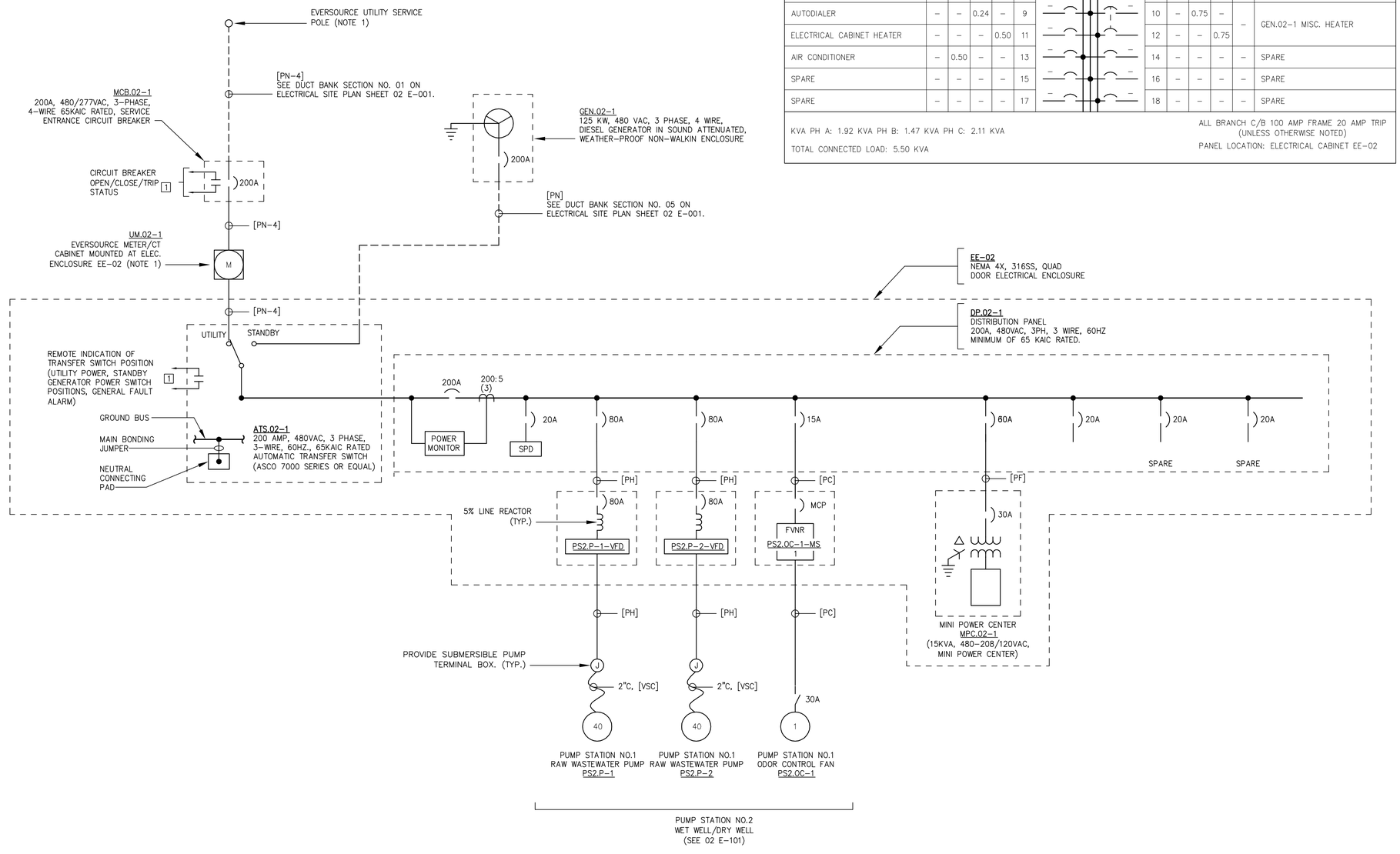

PUMP STATION NO.2 – SINGLE LINE DIAGRAM

Last saved by: ASPESID(2020-01-15) Last Plotted: 2020-01-27
Filename: \\USCHLIFP001\DATA\PROJECTS\WAKEFIELD\DATA_3\PROJ\60476644 - ORLEANS DOWNTOWN PUMP STATIONS\SHEETS\E02 E-002.DWG

AECOM

PROJECT

DOWNTOWN AREA COLLECTION SYSTEM AND PUMP STATIONS

CONTRACT No. 2019-02
SRF No. 4486

OWNER

TOWN OF ORLEANS, MA
19 SCHOOL ROAD
ORLEANS, MA 02653
(508) 240-3700

ENGINEER

AECOM TECHNICAL SERVICES, INC.
9 JONATHAN BOURNE DRIVE
POCASSET, MA 02559
PHONE: (508) 833-6950
www.aecom.com

REGISTRATION

COMMONWEALTH OF MASSACHUSETTS
ANDREA ABRAHAM
ELECTRICAL
NO. 54966
REGISTERED
PROFESSIONAL ENGINEER

01-24-2020

ISSUE/REVISION

I/R	DATE	DESCRIPTION

PROJECT NUMBER

60587515

Designed By:	A. ABRAHAM
Drawn By:	A. ABRAHAM
Dept Check:	Y. RIZK
Proj Check:	T. PARECE
Date:	JANUARY 2020
Scale:	AS NOTED

DISCIPLINE

ELECTRICAL

SHEET TITLE

PUMP STATION NO.2 - ELECTRICAL SINGLE LINE DIAGRAM

SHEET NUMBER

02 E-002

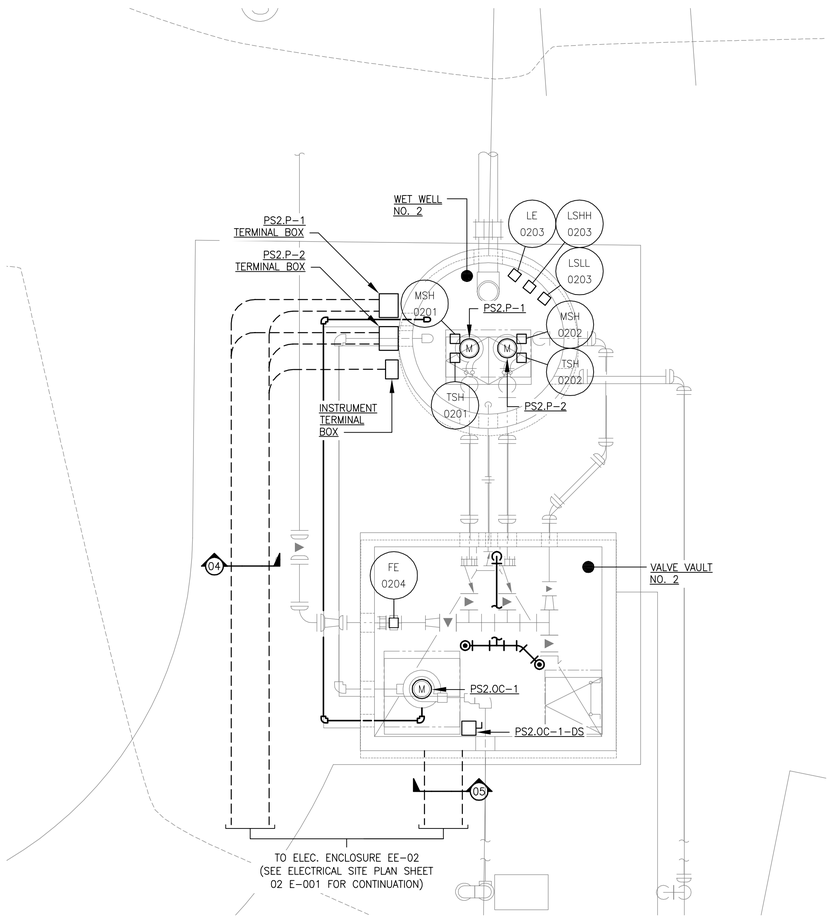

PUMP STATION NO.2 - PLAN VIEW

(SCALE: 1/4" = 1'-0")

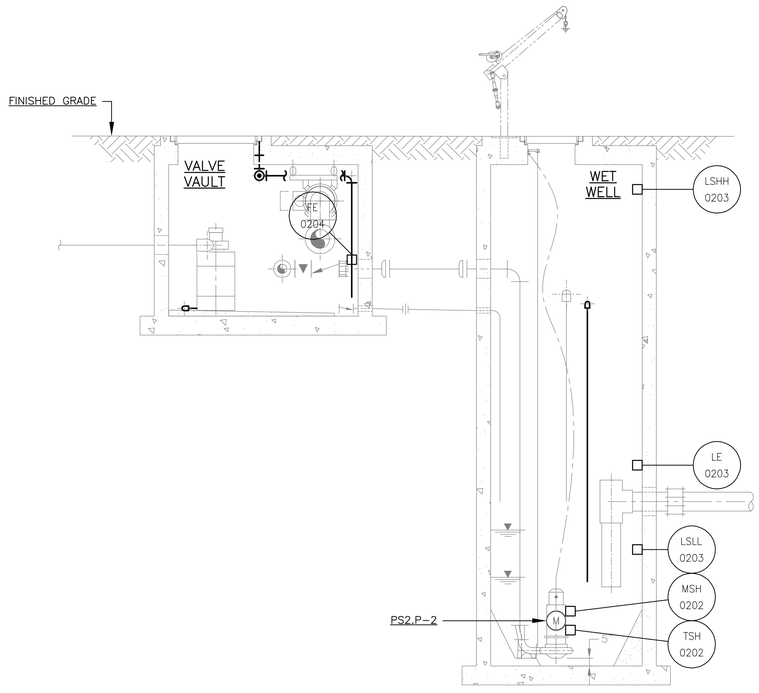

PUMP STATION NO.2 - SECTION VIEW

(SCALE: 1/4" = 1'-0")

1/4"=1'-0" SCALE 0 4 8 12 FEET

Last saved by: ASPESID(2020-01-15) Last Plotted: 2020-01-27
Filename: \\USCHL1FP001\DATA\PROJECTS\WAKEFIELD\DATA_3\PROJ\60476644 - ORLEANS DOWNTOWN PUMP STATIONS\SHEETS\E02 E-101.DWG

AECOM

PROJECT

DOWNTOWN AREA COLLECTION SYSTEM AND PUMP STATIONS

CONTRACT No. 2019-02
SRF No. 4486

OWNER

TOWN OF ORLEANS, MA

19 SCHOOL ROAD
ORLEANS, MA 02653
(508) 240-3700

ENGINEER

AECOM TECHNICAL SERVICES, INC.
9 JONATHAN BOURNE DRIVE
POCASSET, MA 02559
PHONE: (508) 833-6950
www.aecom.com

REGISTRATION

COMMONWEALTH OF MASSACHUSETTS
ANDREA ABRAHAM
ELECTRICAL
NO. 54966
REGISTERED
PROFESSIONAL ENGINEER

01-24-2020

ISSUE/REVISION

I/R	DATE	DESCRIPTION

PROJECT NUMBER

60587515

Designed By:	**A. ABRAHAM**
Drawn By:	**A. ABRAHAM**
Dept Check:	**Y. RIZK**
Proj Check:	**T. PARECE**
Date:	**JANUARY 2020**
Scale:	**AS NOTED**

DISCIPLINE

ELECTRICAL

SHEET TITLE

PUMP STATION NO.2 - ELECTRICAL POWER PLAN

SHEET NUMBER

02 E-101

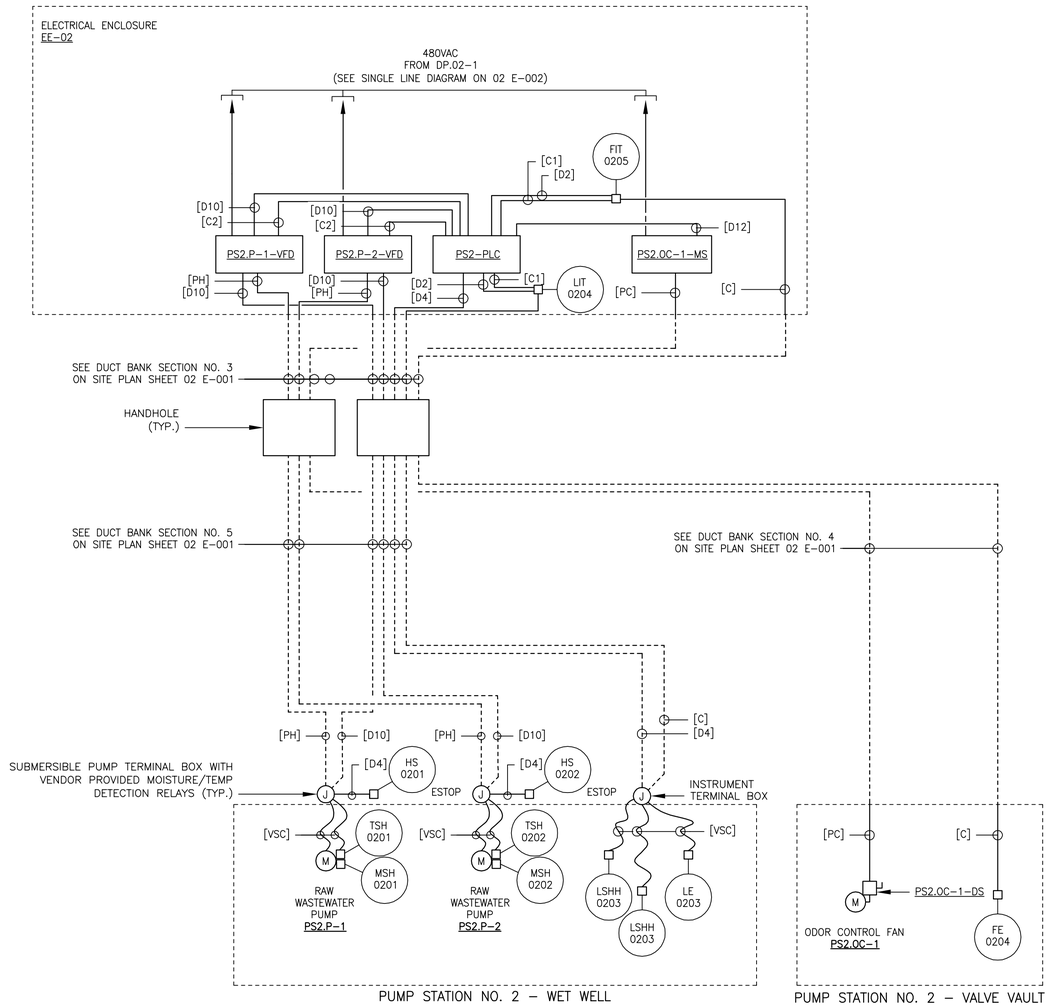

PUMP STATION NO.1 – WET WELL AND VALVE VAULT – RISER DIAGRAMS

SCALE: NTS

Last saved by: ABRAHAMA (2019-08-16) Last Plotted: 2020-01-27
Filename: \\USCHLLFP001\DATA\PROJECTS\WAKEFIELD\DATA_3\PROJ\60476644 - ORLEANS DOWNTOWN PUMP STATIONS\SHEETS\E\02 E-601.DWG

AECOM

PROJECT

DOWNTOWN AREA
COLLECTION SYSTEM
AND PUMP STATIONS

CONTRACT No. 2019-02
SRF No. 4486

OWNER

TOWN OF ORLEANS, MA

19 SCHOOL ROAD
ORLEANS, MA 02653
(508) 240-3700

ENGINEER

AECOM TECHNICAL SERVICES, INC.
9 JONATHAN BOURNE DRIVE
POCASSET, MA 02559
PHONE: (508) 833-6950
www.aecom.com

REGISTRATION

COMMONWEALTH OF MASSACHUSETTS
ANDREW J. ABRAHAM, JR.
ELECTRICAL
NO. 54966
REGISTERED
PROFESSIONAL ENGINEER

01-24-2020

ISSUE/REVISION

I/R	DATE	DESCRIPTION

PROJECT NUMBER

60587515

Designed By:	**A. ABRAHAM**
Drawn By:	**A. ABRAHAM**
Dept Check:	**Y. RIZK**
Proj Check:	**T. PARECE**
Date:	**JANUARY 2020**
Scale:	**AS NOTED**

DISCIPLINE

ELECTRICAL

SHEET TITLE

PUMP STATION NO.2 - ELECTRICAL RISER DIAGRAMS

SHEET NUMBER

02 E-601

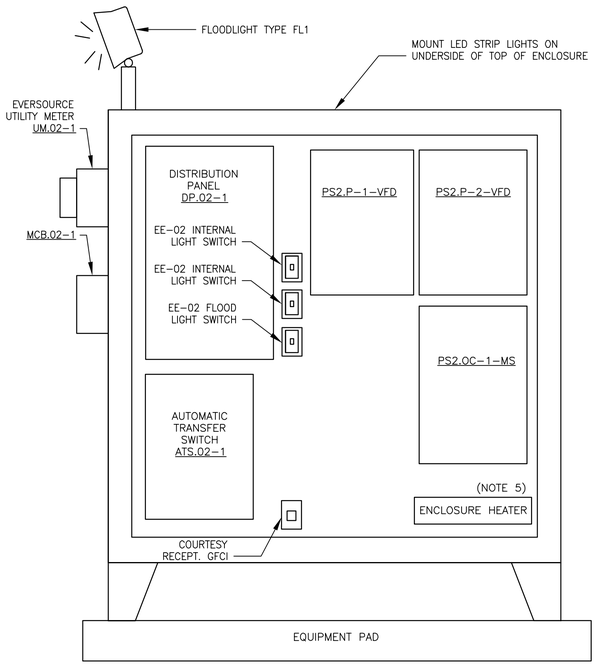

EE-02 – ENCLOSURE LAYOUT – FRONT

SCALE: NTS

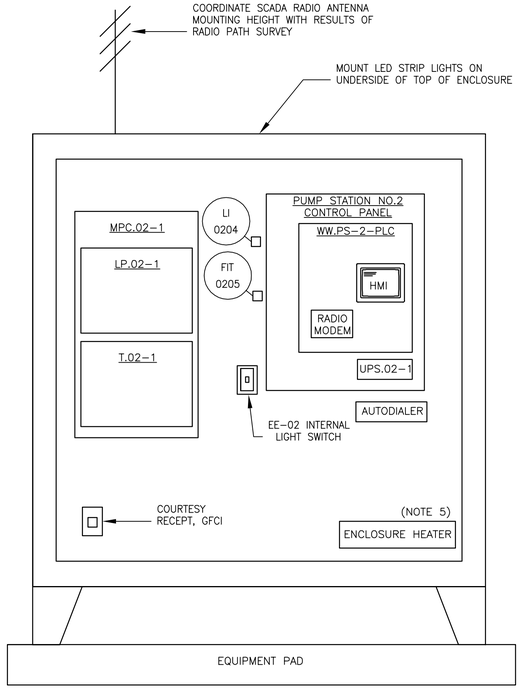

EE-02 – ENCLOSURE LAYOUT – BACK

SCALE: NTS

NOTES:

1. PROVIDE ENCLOSURE CONSTRUCTED OF 316 STAINLESS STEEL.
2. COMPONENT LAYOUT IS FOR FUNCTIONAL PURPOSES ONLY. LAYOUT SHALL BE FINALIZED BY ELECTRICAL CONTRACTOR BASED ON SPECIFIC EQUIPMENT MANUFACTURERS AND MODELS SELECTED.
3. SYSTEM INTEGRATOR TO PURCHASE RADIO EQUIPMENT, PLC AND INSTRUMENTS. ELECTRICAL CONTRACTOR SHALL INSTALL EQUIPMENT IN ACCORDANCE WITH MANUFACTURER REQUIREMENTS.
4. PANEL LAYOUT SHOWN WITH DOORS REMOVED.
5. PROVIDE HEATER SIZED TO MAINTAIN MINIMUM TEMPERATURE AS REQUIRED BY ALL COMPONENTS INSIDE ELECTRICAL ENCLOSURE. PROVIDE HEATER CONTROLLED BY AN ADJUSTABLE THERMOSTAT.
6. PROVIDE CONNECTION FOR GENERATOR IN ACCORDANCE WITH THE CITY OF MIDDLETOWN STANDARDS. COORDINATE WITH THE WATER DEPARTMENT ELECTRICIAN.
7. PROVIDE CLOSED LOOP AIR CONDITIONING AS NEEDED TO MAINTAIN TEMPERATURE WITHIN EQUIPMENT RATINGS. AIR CONDITIONER SHALL BE NEMA 4X STAINLESS STEEL WITH CORROSION PACKAGE.

EE-02 – ENCLOSURE LAYOUTS

SCALE: NTS

Last saved by: ABRAHAMA(2020-01-23) Last Plotted: 2020-01-27
Filename: \\USCHL1FP001\DATA\PROJECTS\WAKEFIELD\DATA_3\PROJ\60476644 - ORLEANS DOWNTOWN PUMP STATIONS\SHEETS\IE\02 E-602.DWG

AECOM

PROJECT

DOWNTOWN AREA COLLECTION SYSTEM AND PUMP STATIONS

CONTRACT No. 2019-02
SRF No. 4486

OWNER

TOWN OF ORLEANS, MA

19 SCHOOL ROAD
ORLEANS, MA 02653
(508) 240-3700

ENGINEER

AECOM TECHNICAL SERVICES, INC.
9 JONATHAN BOURNE DRIVE
POCASSET, MA 02559
PHONE: (508) 833-6950
www.aecom.com

REGISTRATION

COMMONWEALTH OF MASSACHUSETTS
ANDREA ABRAHAM
ELECTRICAL
NO. 54966
REGISTERED
PROFESSIONAL ENGINEER

01-24-2020

ISSUE/REVISION

I/R	DATE	DESCRIPTION

PROJECT NUMBER

60587515

Designed By:	**A. ABRAHAM**
Drawn By:	**A. ABRAHAM**
Dept Check:	**Y. RIZK**
Proj Check:	**T. PARECE**
Date:	**JANUARY 2020**
Scale:	**AS NOTED**

DISCIPLINE

ELECTRICAL

SHEET TITLE

PUMP STATION NO.2 - EE-02 ELEVATION

SHEET NUMBER

02 E-602

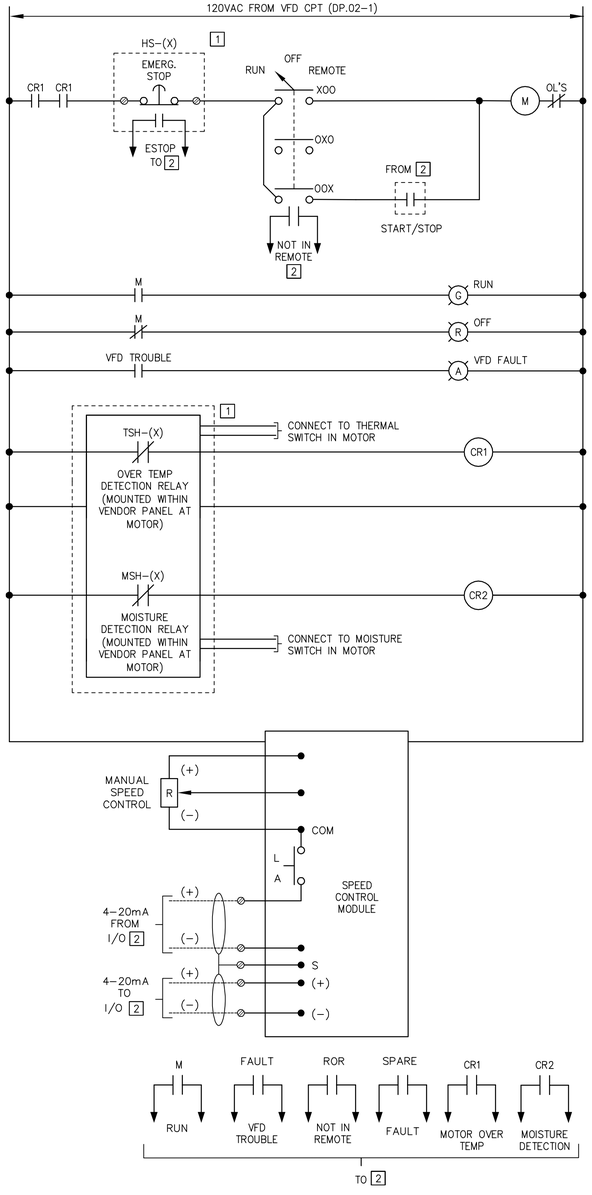

PUMP STATION NO.2
RAW WASTEWATER PUMP
WIRING DIAGRAM
PS2.P-1

(ALL COMPONENTS LOCATED AT VFD UNLESS OTHERWISE NOTED)
(TYPICAL OF PS2.P-2)

EQUIP. TAG (X)	HS-(X)	TSH-(X)	MSH-(X)
PS2.P-1-VFD	0201	0201	0201
PS2.P-2-VFD	0202	0202	0202

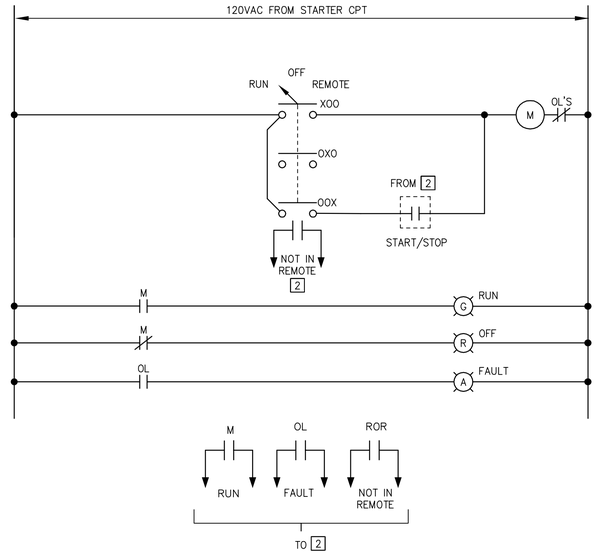

ODOR CONTROL FAN PS2.OC-1
MOTOR STARTER WIRING DIAGRAM

(ALL COMPONENTS LOCATED AT THE STARTER UNLESS OTHERWISE NOTED)

LEGEND

1 DEVICE LOCATED AT EQUIPMENT

2 FROM/TO WW.PS-2-PLC

Last saved by: VAKILH(2019-05-23) Last Plotted: 2020-01-27
Filename: \\USCHL1FP001\DATA\PROJECTS\WAKEFIELD\DATA_3\PROJ\60476644 - ORLEANS DOWNTOWN PUMP STATIONS\SHEETS\E\02 E-603.DWG

AECOM

PROJECT

DOWNTOWN AREA COLLECTION SYSTEM AND PUMP STATIONS

CONTRACT No. 2019-02
SRF No. 4486

OWNER

TOWN OF ORLEANS, MA
19 SCHOOL ROAD
ORLEANS, MA 02653
(508) 240-3700

ENGINEER

AECOM TECHNICAL SERVICES, INC.
9 JONATHAN BOURNE DRIVE
POCASSET, MA 02559
PHONE: (508) 833-6950
www.aecom.com

REGISTRATION

COMMONWEALTH OF MASSACHUSETTS
ANDREW ABRAHAM
ELECTRICAL
NO. 54966
REGISTERED PROFESSIONAL ENGINEER

01-24-2020

ISSUE/REVISION

I/R	DATE	DESCRIPTION

PROJECT NUMBER

60587515

Designed By:	A. ABRAHAM
Drawn By:	A. ABRAHAM
Dept Check:	Y. RIZK
Proj Check:	T. PARECE
Date:	JANUARY 2020
Scale:	AS NOTED

DISCIPLINE

ELECTRICAL

SHEET TITLE

PUMP STATION NO.2 - WIRING SCHEMATICS

SHEET NUMBER

02 E-603

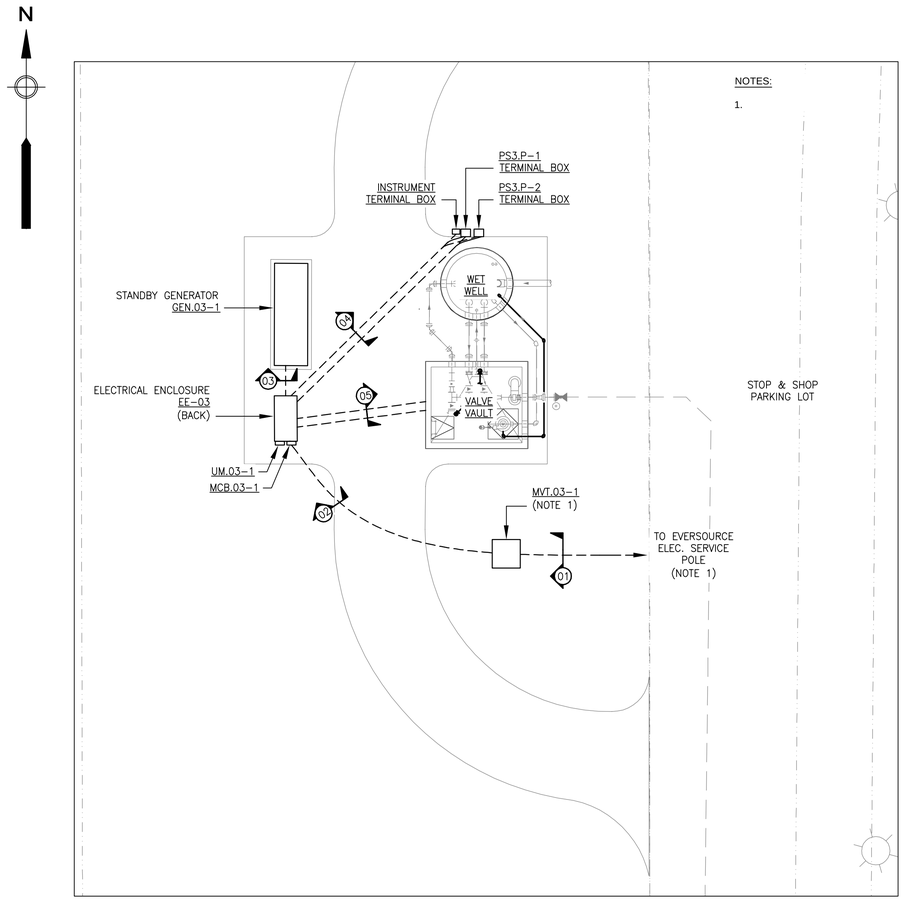

PUMP STATION NO. 3 - ELECTRICAL SITE PLAN

(SCALE: 1"= 10'-0")

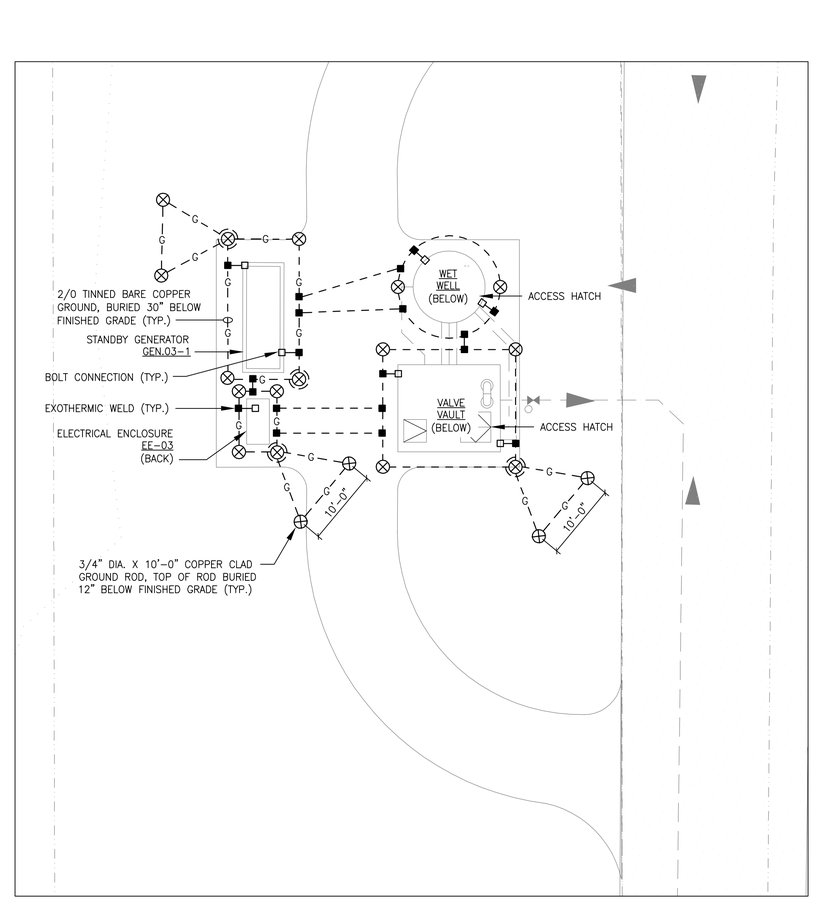

PUMP STATION NO. 3 - ELECTRICAL SITE GROUNDING PLAN

(SCALE: 1"= 10'-0")

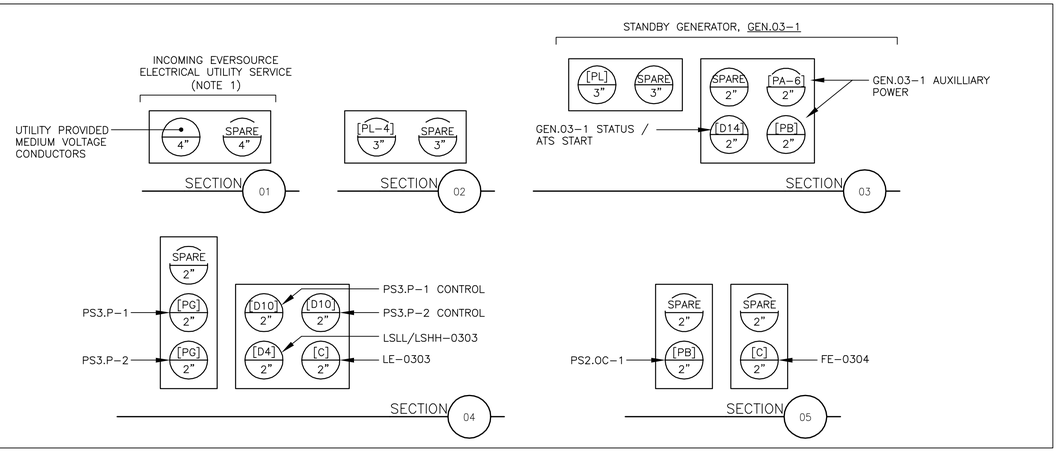

PUMP STATION NO. 3 - DUCT BANK SECTIONS

(SCALE:NTS)

Last saved by: ASPESID (2020-01-15) Last Plotted: 2020-01-27
Filename: \\USCHLLFP001\DATA\PROJECTS\WAKEFIELD\DATA_3\PROJ\60476644 - ORLEANS DOWNTOWN PUMP STATIONS\SHEETS\E03 E-001.DWG

AECOM

PROJECT

DOWNTOWN AREA
COLLECTION SYSTEM
AND PUMP STATIONS

CONTRACT No. 2019-02
SRF No. 4486

OWNER

TOWN OF ORLEANS, MA
19 SCHOOL ROAD
ORLEANS, MA 02653
(508) 240-3700

ENGINEER

AECOM TECHNICAL SERVICES, INC.
9 JONATHAN BOURNE DRIVE
POCASSET, MA 02559
PHONE: (508) 833-6950
www.aecom.com

REGISTRATION

COMMONWEALTH OF MASSACHUSETTS
ANDREA ABRAHAM
ELECTRICAL
NO. 54966
REGISTERED
PROFESSIONAL ENGINEER

01-24-2020

ISSUE/REVISION

I/R	DATE	DESCRIPTION

PROJECT NUMBER

60587515

Designed By:	A. ABRAHAM
Drawn By:	A. ABRAHAM
Dept Check:	Y. RIZK
Proj Check:	T. PARECE
Date:	JANUARY 2020
Scale:	AS NOTED

DISCIPLINE

ELECTRICAL

SHEET TITLE

PUMP STATION NO.3 - ELECTRICAL SITE PLAN

SHEET NUMBER

03 E-001

LEGEND:

[1] PUMP STATION NO.3 PLC

NOTES

1. PROVIDE ELECTRICAL UTILITY SERVICE AND METERING EQUIPMENT IN ACCORDANCE WITH EVERSOURCE REQUIREMENTS.

PANELBOARD "MPC.03-1"

PRIMARY: 480VAC, 3PH, 60HZ
TRANSFORMER: 15KVA
SECONDARY: 208/120V, 3PH, 4W, 60HZ

MAIN CIRCUIT BREAKER: 30A TRIP
SHORT CIRCUIT BRACING: 10,000 AMPS
CABINET: NEMA 1

GROUND BUS

LOCATION	HP	KVA A	KVA B	KVA C	CIR. NO.	NEUTRAL A B C	CIR. NO.	KVA A	KVA B	KVA C	HP	LOCATION
WW.PS-3-PLC	–	0.60	–	–	1		2	0.12	–	–	–	ELECTRICAL CABINET FLOOD LIGHT
FLOW METER FIT-0304	–	–	0.12	–	3		4	–	0.36	–	–	GEN.03-1 BATTERY CHARGER
ELECTRICAL CABINET RECEPT.	–	–	–	0.36	5		6	–	–	0.50	–	GEN.03-1 MISC. HEATER
ELECTRICAL CABINET LIGHTING	–	0.20	–	–	7		8	0.50	–	–	–	GEN.03-1 MISC. HEATER
AUTODIALER	–	–	0.24	–	9		10	–	0.75	–	–	GEN.03-1 MISC. HEATER
ELECTRICAL CABINET HEATER	–	–	–	0.50	11		12	–	–	0.75		
AIR CONDITIONER	–	0.50	–	–	13		14	–	–	–	–	SPARE
SPARE	–	–	–	–	15		16	–	–	–	–	SPARE
SPARE	–	–	–	–	17		18	–	–	–	–	SPARE

KVA PH A: 1.92 KVA PH B: 1.47 KVA PH C: 2.11 KVA

TOTAL CONNECTED LOAD: 5.50 KVA

ALL BRANCH C/B 100 AMP FRAME 20 AMP TRIP (UNLESS OTHERWISE NOTED)

PANEL LOCATION: ELECTRICAL CABINET EE-02

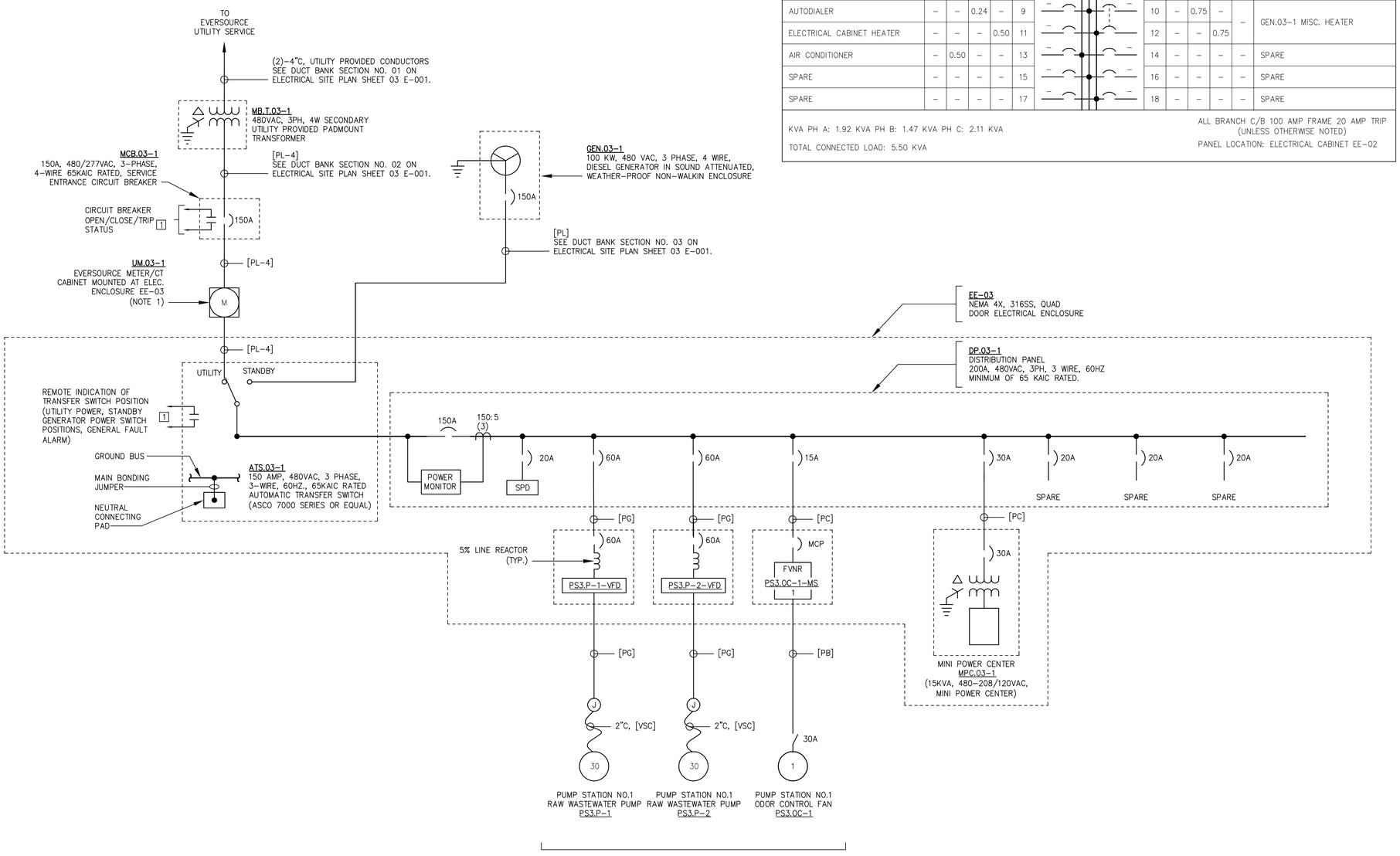

PUMP STATION NO. 3 – SINGLE LINE DIAGRAM

AECOM

PROJECT

DOWNTOWN AREA COLLECTION SYSTEM AND PUMP STATIONS

CONTRACT No. 2019-02
SRF No. 4486

OWNER

TOWN OF ORLEANS, MA
19 SCHOOL ROAD
ORLEANS, MA 02653
(508) 240-3700

ENGINEER

AECOM TECHNICAL SERVICES, INC.
9 JONATHAN BOURNE DRIVE
POCASSET, MA 02559
PHONE: (508) 833-6950
www.aecom.com

REGISTRATION

COMMONWEALTH OF MASSACHUSETTS
ANDRE ABRAHAM
ELECTRICAL
NO. 54966
REGISTERED
PROFESSIONAL ENGINEER

01-24-2020

ISSUE/REVISION

I/R	DATE	DESCRIPTION

PROJECT NUMBER

60587515

Designed By:	A. ABRAHAM
Drawn By:	A. ABRAHAM
Dept Check:	Y. RIZK
Proj Check:	T. PARECE
Date:	JANUARY 2020
Scale:	AS NOTED

DISCIPLINE

ELECTRICAL

SHEET TITLE

PUMP STATION NO.3 - ELECTRICAL SINGLE LINE DIAGRAM

SHEET NUMBER

03 E-002

Last saved by: ASPESID(2020-01-15) Last Plotted: 2020-01-27
Filename: \\USCHLLFP001\DATA\PROJECTS\WAKEFIELD\DATA_3\PROJ\60476644 - ORLEANS DOWNTOWN PUMP STATION\SHEETS\E\03 E-002.DWG

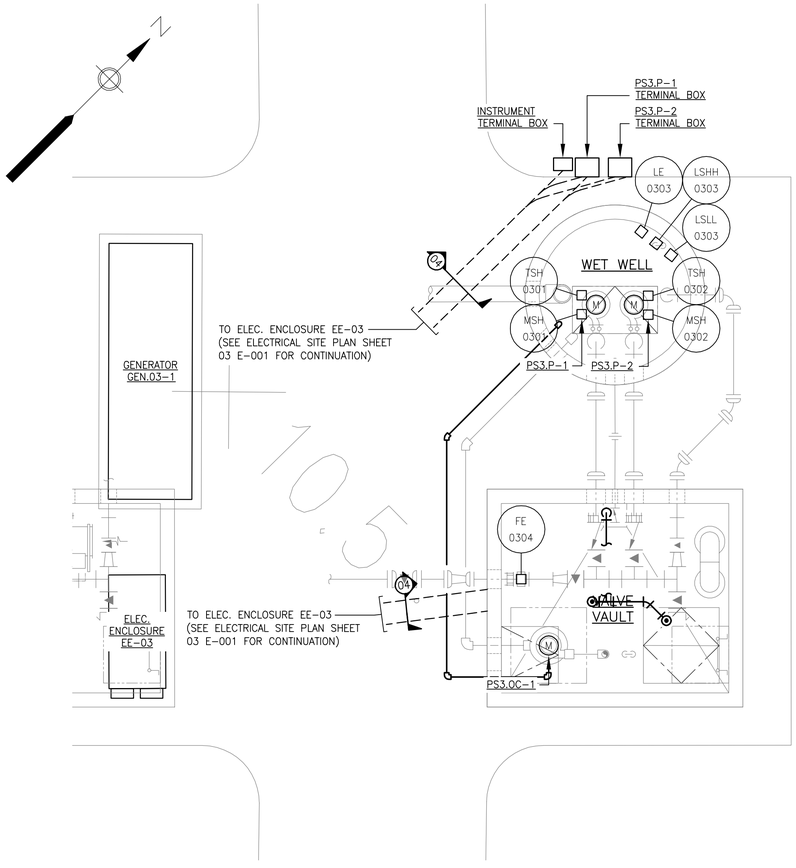

PUMP STATION NO. 3 - PLAN VIEW

(SCALE: 1/4" = 1'-0")

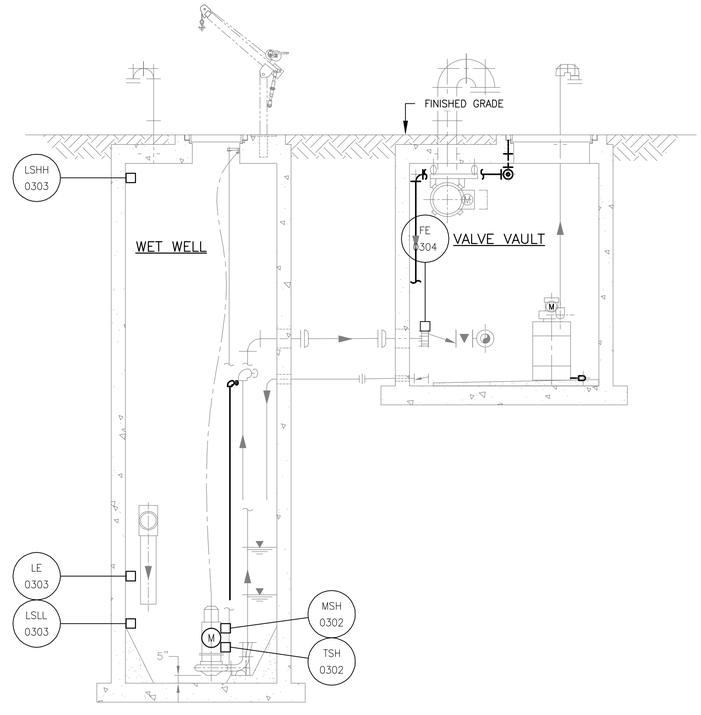

PUMP STATION NO. 3 - SECTION VIEW

(SCALE: 1/4" = 1'-0")

1/4"=1'-0" SCALE 0 4 8 12 FEET

AECOM

PROJECT

DOWNTOWN AREA
COLLECTION SYSTEM
AND PUMP STATIONS

CONTRACT No. 2019-02
SRF No. 4486

OWNER

TOWN OF ORLEANS, MA
19 SCHOOL ROAD
ORLEANS, MA 02653
(508) 240-3700

ENGINEER

AECOM TECHNICAL SERVICES, INC.
9 JONATHAN BOURNE DRIVE
POCASSET, MA 02559
PHONE: (508) 833-6950
www.aecom.com

REGISTRATION

COMMONWEALTH OF MASSACHUSETTS
ANDREA ABRAHAM
ELECTRICAL
NO. 54966
REGISTERED
PROFESSIONAL ENGINEER

01-24-2020

ISSUE/REVISION

I/R	DATE	DESCRIPTION

PROJECT NUMBER

60587515

Designed By:	**A. ABRAHAM**
Drawn By:	**A. ABRAHAM**
Dept Check:	**Y. RIZK**
Proj Check:	**T. PARECE**
Date:	**JANUARY 2020**
Scale:	**AS NOTED**

DISCIPLINE

ELECTRICAL

SHEET TITLE

PUMP STATION NO.3 - ELECTRICAL POWER PLAN

SHEET NUMBER

03 E-101

Last saved by: ASPESID(2020-01-15) Last Plotted: 2020-01-27
Filename: \\USCHLLFP001\DATA\PROJECTS\WAKEFIELD\DATA_3\PROJ\60476644 - ORLEANS DOWNTOWN PUMP STATIONS\SHEETS\E\03 E-101.DWG

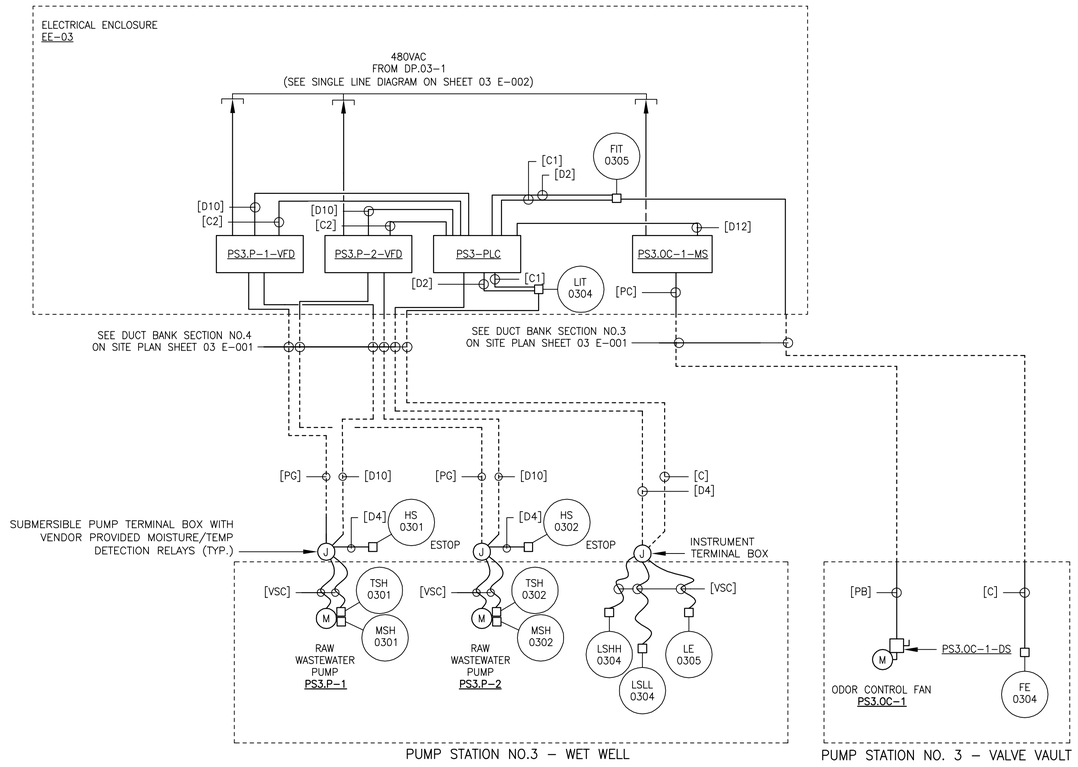

PUMP STATION NO.3 – WET WELL

PUMP STATION NO. 3 – VALVE VAULT

PUMP STATION NO.3 – WET WELL AND VALVE VAULT – RISER DIAGRAMS

SCALE: NTS

Last saved by: ABRAHAMA(2019-08-16) Last Plotted: 2020-01-27
Filename: \\USCHLF1FP001\DATA\PROJECTS\WAKEFIELD\DATA_3\PROJ\60476644 - ORLEANS DOWNTOWN PUMP STATION\SHEETS\E\03 E-601.DWG

AECOM

PROJECT

DOWNTOWN AREA COLLECTION SYSTEM AND PUMP STATIONS

CONTRACT No. 2019-02
SRF No. 4486

OWNER

TOWN OF ORLEANS, MA

19 SCHOOL ROAD
ORLEANS, MA 02653
(508) 240-3700

ENGINEER

AECOM TECHNICAL SERVICES, INC.
9 JONATHAN BOURNE DRIVE
POCASSET, MA 02559
PHONE: (508) 833-6950
www.aecom.com

REGISTRATION

COMMONWEALTH OF MASSACHUSETTS
ANDREA ABRAHAM
ELECTRICAL
NO. 54966
REGISTERED
PROFESSIONAL ENGINEER

01-24-2020

ISSUE/REVISION

I/R	DATE	DESCRIPTION

PROJECT NUMBER

60587515

Designed By:	**A. ABRAHAM**
Drawn By:	**A. ABRAHAM**
Dept Check:	**Y. RIZK**
Proj Check:	**T. PARECE**
Date:	**JANUARY 2020**
Scale:	**AS NOTED**

DISCIPLINE

ELECTRICAL

SHEET TITLE

PUMP STATION NO.3 - ELECTRICAL RISER DIAGRAMS

SHEET NUMBER

03 E-601

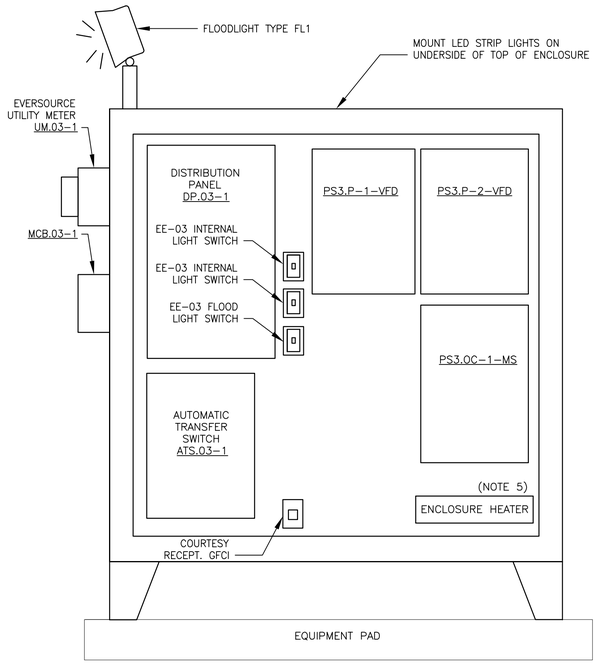

EE-03 – ENCLOSURE LAYOUT – FRONT

SCALE: NTS

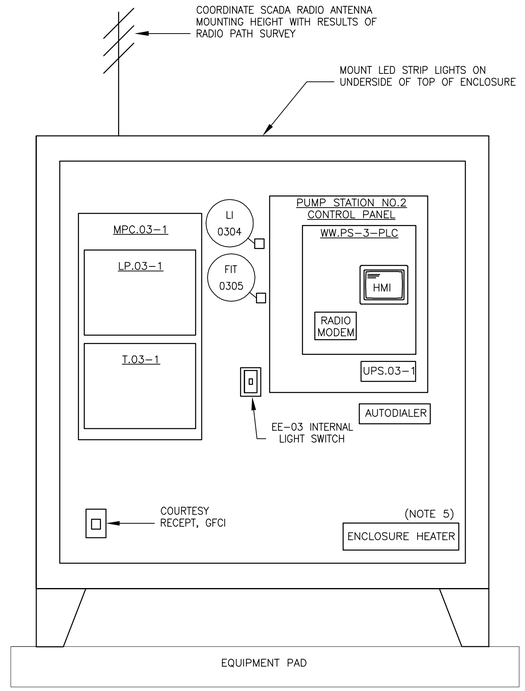

EE-03 – ENCLOSURE LAYOUT – BACK

SCALE: NTS

NOTES:

1. PROVIDE ENCLOSURE CONSTRUCTED OF 316 STAINLESS STEEL. PROVIDE ENCLOSURE AS A MINIMUM OF 6 FT WIDE.
2. COMPONENT LAYOUT IS FOR FUNCTIONAL PURPOSES ONLY. LAYOUT SHALL BE FINALIZED BY ELECTRICAL CONTRACTOR BASED ON SPECIFIC EQUIPMENT MANUFACTURERS AND MODELS SELECTED.
3. SYSTEM INTEGRATOR TO PURCHASE RADIO EQUIPMENT, PLC AND INSTRUMENTS. ELECTRICAL CONTRACTOR SHALL INSTALL EQUIPMENT IN ACCORDANCE WITH MANUFACTURER REQUIREMENTS.
4. PANEL LAYOUT SHOWN WITH DOORS REMOVED.
5. PROVIDE HEATER SIZED TO MAINTAIN MINIMUM TEMPERATURE AS REQUIRED BY ALL COMPONENTS INSIDE ELECTRICAL ENCLOSURE. PROVIDE HEATER CONTROLLED BY AN ADJUSTABLE THERMOSTAT.
6. PROVIDE CONNECTION FOR GENERATOR IN ACCORDANCE WITH THE CITY OF MIDDLETOWN STANDARDS. COORDINATE WITH THE WATER DEPARTMENT ELECTRICIAN.
7. PROVIDE CLOSED LOOP AIR CONDITIONING AS NEEDED TO MAINTAIN TEMPERATURE WITHIN EQUIPMENT RATINGS. AIR CONDITIONER SHALL BE NEMA 4X STAINLESS STEEL WITH CORROSION PACKAGE.

EE-03 – ENCLOSURE LAYOUTS

SCALE: NTS

AECOM

PROJECT

DOWNTOWN AREA COLLECTION SYSTEM AND PUMP STATIONS

CONTRACT No. 2019-02
SRF No. 4486

OWNER

TOWN OF ORLEANS, MA

19 SCHOOL ROAD
ORLEANS, MA 02653
(508) 240-3700

ENGINEER

AECOM TECHNICAL SERVICES, INC.
9 JONATHAN BOURNE DRIVE
POCASSET, MA 02559
PHONE: (508) 833-6950
www.aecom.com

REGISTRATION

COMMONWEALTH OF MASSACHUSETTS
ANDREA ABRAHAM
ELECTRICAL
NO. 54966
REGISTERED
PROFESSIONAL ENGINEER

01-24-2020

ISSUE/REVISION

I/R	DATE	DESCRIPTION

PROJECT NUMBER

60587515

Designed By:	**A. ABRAHAM**
Drawn By:	**A. ABRAHAM**
Dept Check:	**Y. RIZK**
Proj Check:	**T. PARECE**
Date:	**JANUARY 2020**
Scale:	**AS NOTED**

DISCIPLINE

ELECTRICAL

SHEET TITLE

PUMP STATION NO.3 - EE-03 ELEVATION

SHEET NUMBER

03 E-602

Last saved by: ABRAHAMA (2020-01-23) Last Plotted: 2020-01-27
Filename: \\USCHL1FP001\DATA\PROJECTS\WAKEFIELD\DATA_3\PROJ\60476644 - ORLEANS DOWNTOWN PUMP STATIONS\SHEETS\E03 E-602.DWG

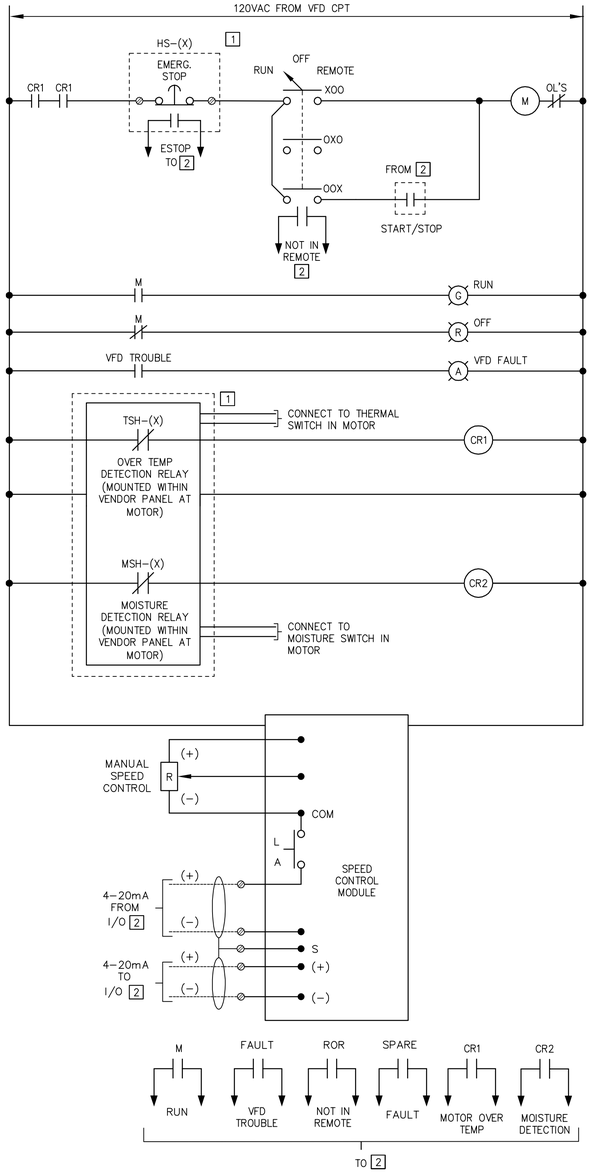

PUMP STATION NO.3
RAW WASTEWATER PUMP
WIRING DIAGRAM
PS3.P-1

(ALL COMPONENTS LOCATED AT VFD UNLESS OTHERWISE NOTED)
(TYPICAL OF PS3.P-2)

EQUIP. TAG (X)	HS-(X)	TSH-(X)	MSH-(X)
PS3.P-1-VFD	0301	0301	0301
PS3.P-2-VFD	0302	0302	0302

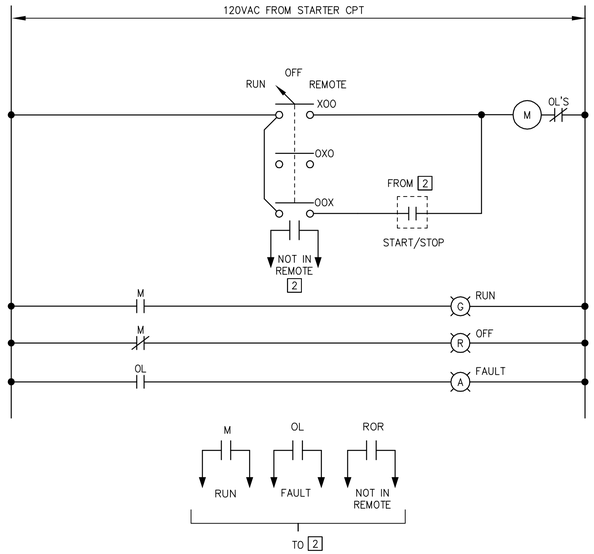

ODOR CONTROL FAN PS3.OC-1
MOTOR STARTER WIRING DIAGRAM

(ALL COMPONENTS LOCATED AT THE STARTER UNLESS OTHERWISE NOTED)

LEGEND

1 DEVICE LOCATED AT EQUIPMENT

2 FROM/TO WW.PS-3-PLC

Last saved by: ASPESID(2020-01-15) Last Plotted: 2020-01-27
Filename: \\USCHLIFP001\DATA\PROJECTS\WAKEFIELD\DATA_3\PROJ\60476644 - ORLEANS DOWNTOWN PUMP STATIONS\SHEETS\E603 E-603.DWG

AECOM

PROJECT

DOWNTOWN AREA COLLECTION SYSTEM AND PUMP STATIONS

CONTRACT No. 2019-02
SRF No. 4486

OWNER

TOWN OF ORLEANS, MA
19 SCHOOL ROAD
ORLEANS, MA 02653
(508) 240-3700

ENGINEER

AECOM TECHNICAL SERVICES, INC.
9 JONATHAN BOURNE DRIVE
POCASSET, MA 02559
PHONE: (508) 833-6950
www.aecom.com

REGISTRATION

COMMONWEALTH OF MASSACHUSETTS
ANDREA ABRAHAM
ELECTRICAL
NO. 54966
REGISTERED
PROFESSIONAL ENGINEER

01-24-2020

ISSUE/REVISION

I/R	DATE	DESCRIPTION

PROJECT NUMBER

60587515

Designed By:	A. ABRAHAM
Drawn By:	A. ABRAHAM
Dept Check:	Y. RIZK
Proj Check:	T. PARECE
Date:	JANUARY 2020
Scale:	AS NOTED

DISCIPLINE

ELECTRICAL

SHEET TITLE

PUMP STATION NO.3 - WIRING SCHEMATICS

SHEET NUMBER

03 E-603

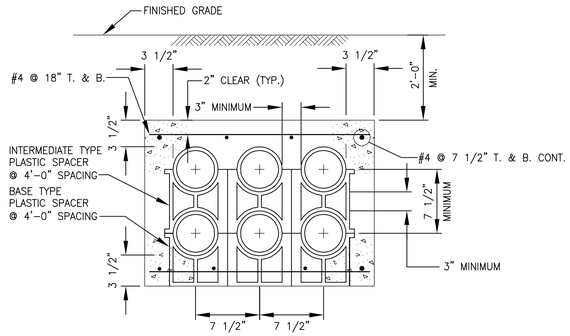

DUCTBANK SECTION

NTS

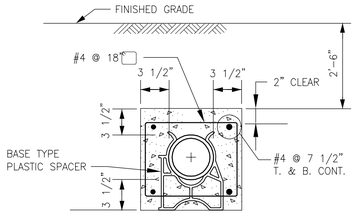

SINGLE CONDUIT DUCTBANK SECTION

NTS

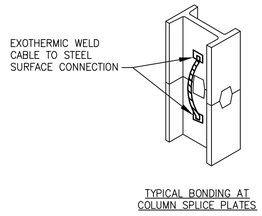

TYPICAL BONDING AT COLUMN SPLICE PLATES

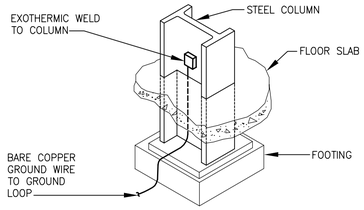

GROUNDING FOR STEEL COLUMN

NTS

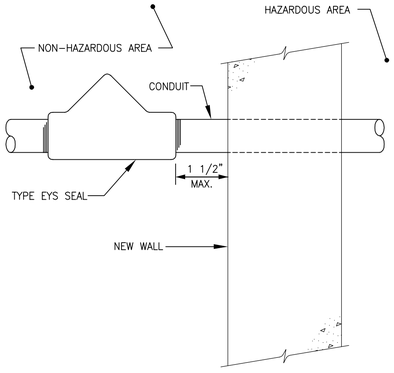

HAZARDOUS AREA ENTRANCE SEAL

NTS

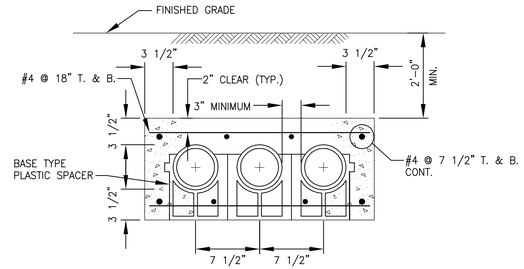

SINGLE LAYER DUCT BANK SECTION

NTS

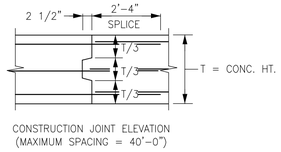

CONSTRUCTION JOINT ELEVATION (MAXIMUM SPACING = 40'-0")

DUCTBANK CONSTRUCTION JOINT

NTS

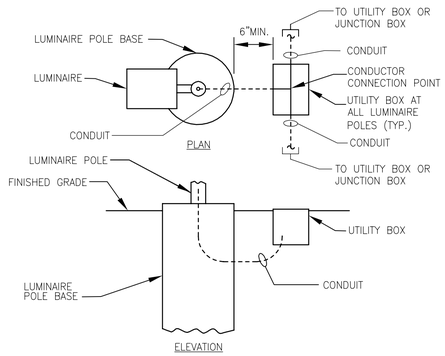

POLE BASE/UTILITY BOX DETAIL

NOT TO SCALE

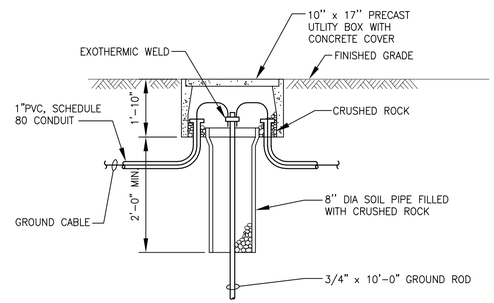

GROUND ROD AND TEST WELL

N.T.S.

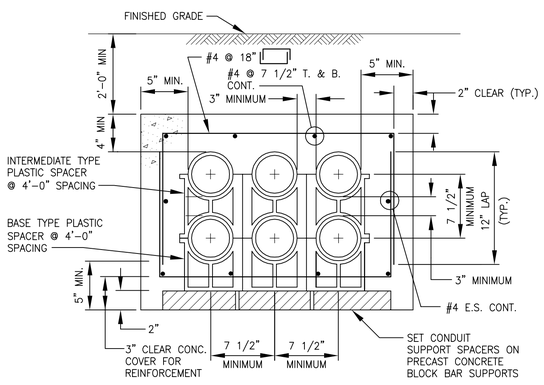

DUCT BANK SECTION UNDER ROADWAY AND PAVED AREA

NTS

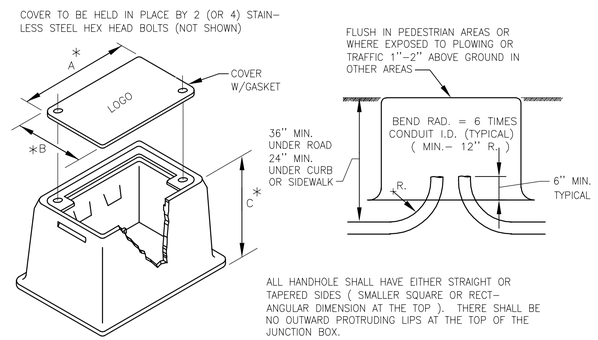

* DIMENSIONS A THRU C AS SHOWN ON THE PLANS. (MINIMUM 18" X 12" X 12" OR AS REQUIRED BY THE NATIONAL ELECTRICAL CODE)

UTILITY BOX

NTS

(SHAPE MAY VARY SLIGHTLY WITH MANUFACTURER)

AECOM

PROJECT

DOWNTOWN AREA COLLECTION SYSTEM AND PUMP STATIONS

CONTRACT No. 2019-02
SRF No. 4486

OWNER

TOWN OF ORLEANS, MA

19 SCHOOL ROAD
ORLEANS, MA 02653
(508) 240-3700

ENGINEER

AECOM TECHNICAL SERVICES, INC.
9 JONATHAN BOURNE DRIVE
POCASSET, MA 02559
PHONE: (508) 833-6950
www.aecom.com

REGISTRATION

COMMONWEALTH OF MASSACHUSETTS
ANDRE ABRAHAM
ELECTRICAL
NO. 54966
REGISTERED
PROFESSIONAL ENGINEER

01-24-2020

ISSUE/REVISION

I/R	DATE	DESCRIPTION

PROJECT NUMBER

60587515

Designed By:	A. ABRAHAM
Drawn By:	A. ABRAHAM
Dept Check:	Y. RIZK
Proj Check:	T. PARECE
Date:	JANUARY 2020
Scale:	AS NOTED

DISCIPLINE

ELECTRICAL

SHEET TITLE

ELECTRICAL DETAILS I

SHEET NUMBER

99 E-501

Last saved by: ASPESID(2020-01-13) Last Plotted: 2020-01-27
Filename: \\USCHLLFP001\DATA\PROJECTS\WAKEFIELD\DATA_3\PROJ\60476644 - ORLEANS DOWNTOWN PUMP STATIONS\SHEETS\E\99 E-501.DWG

MANHOLE, HANDHOLE AND DUCT BANK NOTES

1. ALL CONCRETE INSERTS, FITTINGS AND ACCESSORIES ARE TO BE FABRICATED FROM HEAVY-DUTY STAINLESS STEEL.
2. ALL CONCRETE FOR MANHOLES AND DUCT RUNS TO BE CLASS "A" (4000 PSI) AS PER THE STRUCTURAL SPECIFICATIONS.
3. ALL CONDUIT AND OTHER EQUIPMENT IN MANHOLES SHALL BE BONDED WITH A NO. 4, STRANDED COPPER CABLE (MINIMUM).
4. ALL 4" OR LARGER STEEL CONDUIT BENDS SHALL HAVE A 36" RADIUS (MINIMUM).
5. ALL CABLES SHALL BE TAGGED WITH A PROTECTED PLASTIC TAG OF DISTINCTIVE COLOR AND MARKING FOR EACH VOLTAGE. THE TAGS WILL GIVE VOLTAGE AND CIRCUIT NUMBER ASSIGNED BY THE CONTRACT DRAWING CONDUIT AND WIRE SCHEDULE.
6. CONTRACTOR TO SIZE THE CIRCULAR OPENINGS IN THE MANHOLE ROOF FROM FRAMES ACTUALLY FURNISHED.
7. PLASTIC DUCT SPACERS SHALL BE INSTALLED ON 4 FT. CENTERS. JOINTS ARE TO BE STAGGARED BETWEEN TIERS TO PROVIDE NOT LESS THAN 12 INCH LONGITUDINAL SEPARATION BETWEEN JOINTS SEPARATION BETWEEN JOINTS IN ANY TWO ADJOINING CONDUITS.
8. THE SIZE OF A MANHOLE WINDOW DEPENDS ON THE NUMBER OF CONDUITS IN THE INCOMING DUCTLINE. TO DETERMINE THE ACTUAL WINDOW SIZE AND LOCATION, SEE THE DUCT SECTION. THE WINDOW OPENING MUST ALSO BE A MINIMUM OF ONE FOOT ABOVE MANHOLE FLOOR AND / OR ONE FOOT BELOW MANHOLE ROOF. EACH MANHOLE WINDOW SHOULD BE OFFSET FROM THE CENTER OF THE WALL SO THAT ONE VERTICAL EDGE IS CLOSE TO THE INTERSECTION OF TWO WALLS.
9. ALL STEEL CONDUIT SHALL BE TERMINATED IN MANHOLES WITH CONDUIT GROUNDING BUSHINGS.
10. MANHOLE COVER SHALL HAVE THE WORD "ELECTRIC" CAST ON THE COVER.
11. INSTALL TWO PULLING-IN IRONS OPPOSITE CENTER OF EACH ENTERING DUCT RUN. ONE 6" BELOW ROOF AND ONE 6" ABOVE FLOOR.
12. ALL DUCTS SHALL DRAIN FROM HIGH POINT TO MANHOLE WITH A SLOPE OF NOT LESS THAN 4" PER 100 FEET.

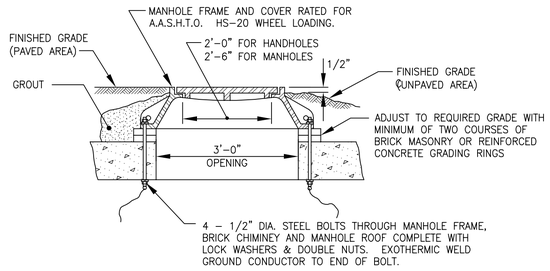

MANHOLE AND HANDHOLE FRAME AND COVER

NTS

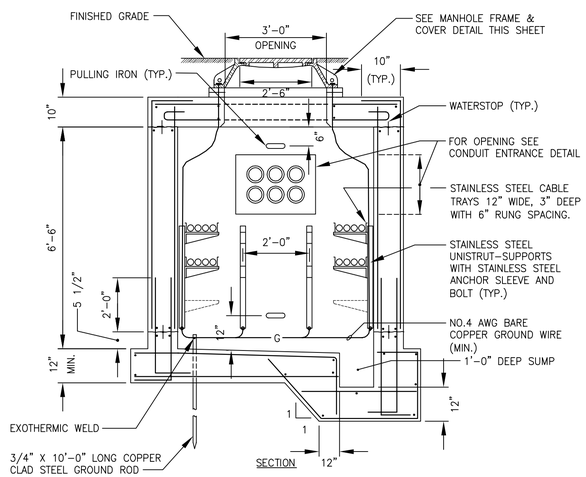

MANHOLE SECTION WITH LOW VOLTAGE CABLE TRAY SUPPORT

NTS

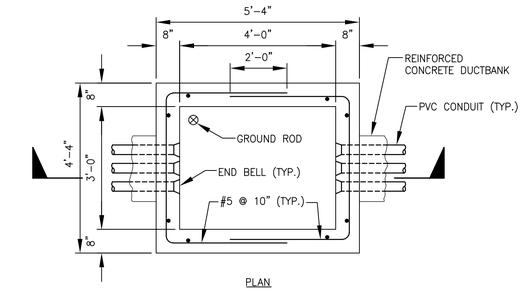

PLAN

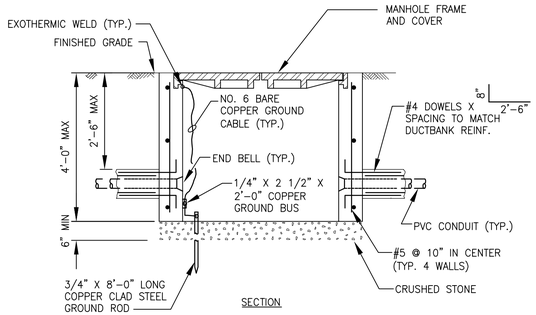

SECTION

3'-0" X 4'-0" HANDHOLE (PVC CONDUIT)

NTS

AECOM

PROJECT

DOWNTOWN AREA COLLECTION SYSTEM AND PUMP STATIONS

CONTRACT No. 2019-02
SRF No. 4486

OWNER

TOWN OF ORLEANS, MA
19 SCHOOL ROAD
ORLEANS, MA 02653
(508) 240-3700

ENGINEER

AECOM TECHNICAL SERVICES, INC.
9 JONATHAN BOURNE DRIVE
POCASSET, MA 02559
PHONE: (508) 833-6950
www.aecom.com

REGISTRATION

COMMONWEALTH OF MASSACHUSETTS
ANDREA ABRAHAM
ELECTRICAL
NO. 54966
REGISTERED PROFESSIONAL ENGINEER

01-24-2020

ISSUE/REVISION

I/R	DATE	DESCRIPTION

PROJECT NUMBER

60587515

Designed By:	A. ABRAHAM
Drawn By:	A. ABRAHAM
Dept Check:	Y. RIZK
Proj Check:	T. PARECE
Date:	JANUARY 2020
Scale:	AS NOTED

DISCIPLINE

ELECTRICAL

SHEET TITLE

ELECTRICAL DETAILS II

SHEET NUMBER

99 E-502

Last saved by: ASPESID(2020-01-13) Last Plotted: 2020-01-27
Filename: \\USCHLFP001\DATA\PROJECTS\WAKEFIELD\DATA_3\PROJ\60476644 - ORLEANS DOWNTOWN PUMP STATIONS\SHEETS\E\99 E-502.DWG

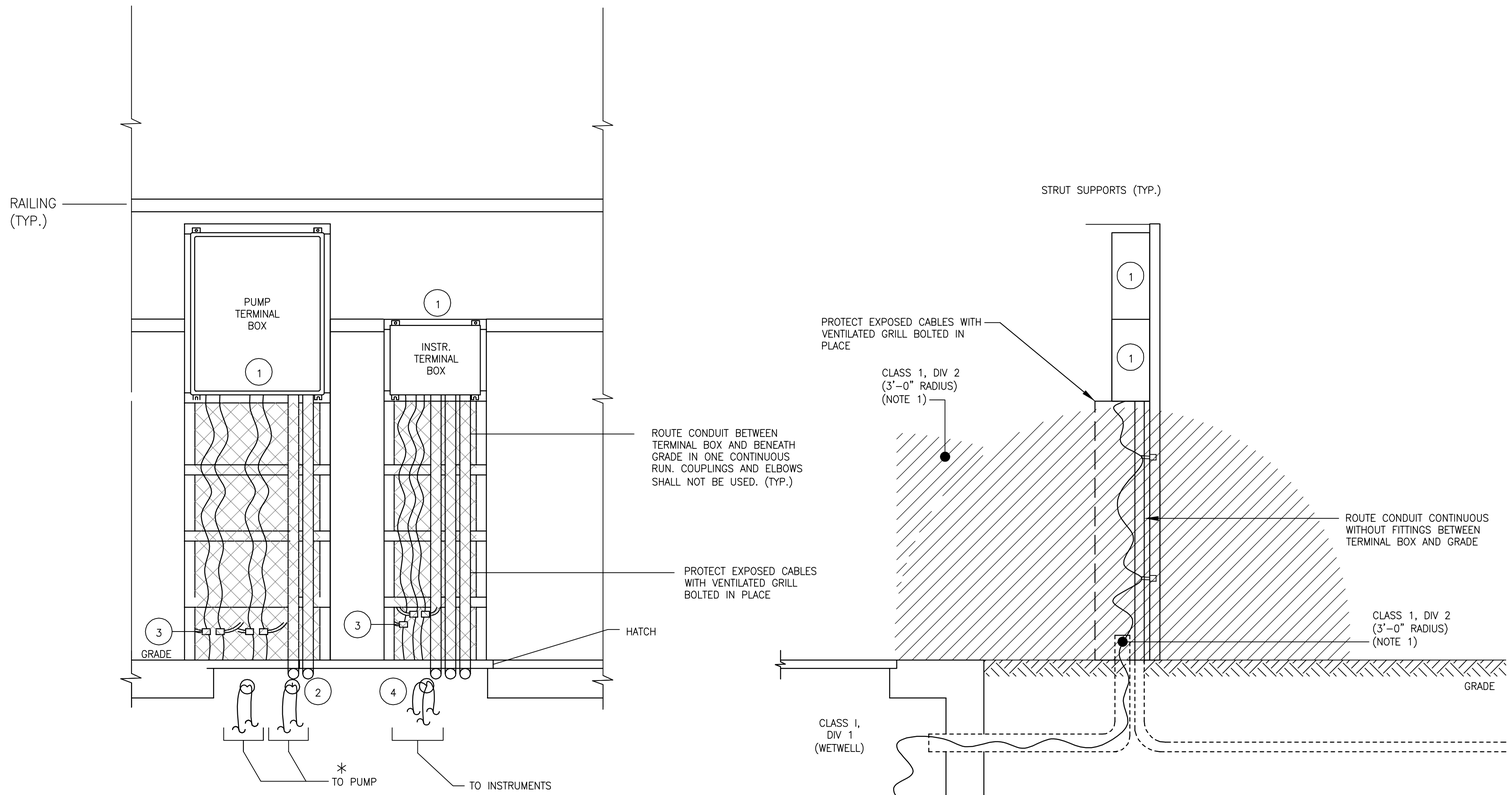

FRONT

RIGHT SIDE

LEGEND

1. NEAM 4X, STAINLESS STEEL TERMINAL BOX (600 VAC OR EQUAL).
2. CABLE BY PUMP SUPPLIER.
3. KELLEM CABLE SAFETY SUPPORT (CONNECTED TO CABLE AND JUNCTION BOX SUPPORT)
4. CABLE BY INSTRUMENT SUPPLIER.

* PUMP CABLES CONFIGURATION SHOWN IS BASED ON TWO CABLES SIMILAR CONFIGURATION SHOULD BE PROVIDED IF PUMP IS PROVIDED WITH SINGLE CABLE

WETWELL DETAIL FOR RWW PUMP/INSTRUMENT CABLE CONNECTIONS

ALL JUNCTION BOXES HAVE APPROPRIATELY SIZED 600V TERMINAL BLOCKS

NOTES

1. CLASS I, DIVISION 2 WITHIN 3'-0" OF WETWELL HATCH AND CONDUIT STUB UP FROM WELL.

AECOM

PROJECT

DOWNTOWN AREA COLLECTION SYSTEM AND PUMP STATIONS

CONTRACT No. 2019-02
SRF No. 4486

OWNER

TOWN OF ORLEANS, MA
19 SCHOOL ROAD
ORLEANS, MA 02653
(508) 240-3700

ENGINEER

AECOM TECHNICAL SERVICES, INC.
9 JONATHAN BOURNE DRIVE
POCASSET, MA 02559
PHONE: (508) 833-6950
www.aecom.com

REGISTRATION



01-24-2020

ISSUE/REVISION

I/R	DATE	DESCRIPTION

PROJECT NUMBER

60587515

Designed By:	A. ABRAHAM
Drawn By:	A. ABRAHAM
Dept Check:	Y. RIZK
Proj Check:	T. PARECE
Date:	JANUARY 2020
Scale:	AS NOTED

DISCIPLINE

ELECTRICAL

SHEET TITLE

ELECTRICAL DETAILS III

SHEET NUMBER

99 E-503

Last saved by: ASPESID(2020-01-15) Last Plotted: 2020-01-27
Filename: \\USCHL1FP001\DATA\PROJECTS\WAKEFIELD\DATA_3\PROJ\60476644 - ORLEANS DOWNTOWN PUMP STATION\SHEETS\E\99 E-503.DWG

INSTRUMENT TYPE IDENTIFICATION LETTERS

THIS TABLE APPLIES ONLY TO THE FUNCTIONAL IDENTIFICATION OF INSTRUMENTS

	FIRST LETTER		SUCCEEDING LETTERS		
	MEASURED OR INITIATING VARIABLE	MODIFIER	READOUT OR PASSIVE FUNCTION	OUTPUT FUNCTION	MODIFIER
A	ANALYSIS	ANALOG	ALARM		
B	BURNER FLAME		USER'S CHOICE	USER'S CHOICE	USER'S CHOICE
C	CONDUCTIVITY (ELECTRICAL)			CONTROL	
D	DENSITY (MASS) OR SPECIFIC GRAVITY	DIFFERENTIAL OR DIGITAL			
E	VOLTAGE (EMF)		PRIMARY ELEMENT		
F	FLOW RATE	RATIO (FRACTION)			
G	GAGING (DIMENSIONAL)		GLASS		
H	HAND (MANUALLY INITIATED)				HIGH
I	CURRENT (ELECTRICAL)		INDICATE OR INPUT		
J	POWER	SCAN			
K	TIME OR TIME SCHEDULE			CONTROL STATION	
L	LEVEL		LIGHT (PILOT)		LOW
M	MOISTURE OR HUMIDITY				MIDDLE OR INTERMEDIATE
N	USER'S CHOICE		USER'S CHOICE	USER'S CHOICE	USER'S CHOICE
O	USER'S CHOICE		ORIFICE (RESTRICTION)		
P	PRESSURE OR VACUUM		POINT (TEST CONNECTION)		
Q	QUANTITY OR EVENT	INTEGRATE OR TOTALIZE			
R	RADIOACTIVITY	RELIEF	RECORD OR PRINT		
S	SPEED OR FREQUENCY	SAFETY		SWITCH	
T	TEMPERATURE			TRANSMIT	
U	MULTIVARIABLE		MULTIFUNCTION	MULTIFUNCTION	MULTIFUNCTION
V	VIBRATION			VALVE, DAMPER OR LOUVER	
W	WEIGHT OR FORCE		WELL		
X	UNCLASSIFIED		UNCLASSIFIED	UNCLASSIFIED	UNCLASSIFIED
Y	USER'S CHOICE			RELAY OR COMPUTE	
Z	POSITION			DRIVE, ACTUATE OR UNCLASSIFIED FINAL CONTROL ELEMENT	

MISCELLANEOUS ABBREVIATIONS

I/P	CURRENT TO PNEUMATIC CONVERTER	GBT	GRAVITY BELT THICKENER
E/I	VOLTAGE TO CURRENT CONVERTER	DO	DISSOLVED OXYGEN
∑	ADD OR TOTALIZE	H2S	HYDROGEN SULFIDE
√	SQUARE ROOT	O2	OXYGEN
X	MULTIPLY	pH	HYDROGEN ION CONCENTRATION
⊘	DIVIDE	LP	LOCAL PANEL
>	HIGH SELECT	VFD	VARIABLE FREQUENCY DRIVE
MV	MEASURED VARIABLE	△	DIFFERENCE
<	LOW SELECT	I/O	INPUT/OUTPUT
S.P.	SET POINT	ER	ELECTRICAL ROOM
PLC	PROGRAMMABLE LOGIC CONTROLLER	LEL	LOWER EXPLOSIVE LIMIT
f(x)	CHARACTERISTIC	DW	DEWATERING
P	PROPORTIONAL CONTROL MODE	OC	ODOR CONTROL
D	DERIVATIVE	WW	WASTE WATER
∫	INTEGRAL CONTROL MODE	SSL	ZERO SPEED SWITCH

SEE MECHANICAL LEGEND FOR ADDITIONAL ABBREVIATIONS AND PROCESS STREAM NAMES

SYMBOLS

HYDRAULIC CONTROL LINES
ELECTRIC INSTRUMENT LINES
PNEUMATIC SIGNAL
PROCESS FLOW
CAPILLARY TUBING
INTERNAL LINK SIGNAL
CONE CHECK VALVE
BALL VALVE
BALL CHECK VALVE
SWING CHECK VALVE
BUTTERFLY VALVE, DAMPER, OR LOUVER
PLUG VALVE
GATE VALVE
DIAPHRAGM VALVE
GLOBE VALVE
RESTRAINED FLEXIBLE COUPLING
FLOAT VALVE
3-WAY MIX VALVE
3-WAY DIVERTER VALVE
3-WAY SOLENOID VALVE
4-WAY MIX VALVE
4-WAY SOLENOID VALVE
ANGLE VALVE
SOLENOID VALVE
SELF-OPERATING BACK PRESSURE REGULATOR VALVE
SELF-OPERATING PRESSURE REGULATOR VALVE
PRESSURE REDUCING REGULATOR VALVE W/EXTERNAL PRESSURE TAP
PRESSURE RELIEF VALVE
VACUUM RELIEF VALVE
KNIFE GATE VALVE
PINCH VALVE
STOP LOG
SLUICE GATE
PREFABRICATED SLIDE GATE
MULTI-BLADE DAMPER

ACCUMULATOR
AERATOR
BAR SCREEN
CALIBRATION STANDPIPE
CHEMICAL SEAL
IN LINE SEAL (NOTE 2)
CONCENTRIC REDUCER
DRAIN
DUPLEX FILTER
ECCENTRIC REDUCER
FLEXIBLE HOSE
GRINDER
LOAD CELL
MIXER
VERTICAL SHAFT MIXER
PULSATION DAMPENER
QUICK DISCONNECT
RADIO, ULTRASONIC, OR ACOUSTIC SIGNAL
RUPTURE DISC (PRESSURE RELIEF)
RUPTURE DISC (VACUUM RELIEF)
STRAINER
CONE CHECK VALVE
DOUBLE DISC CHECK VALVE
FLAME ARRESTOR
INTRINSICALLY SAFE BARRIER
SUBMERSIBLE LEVEL TRANSDUCER

DIFFUSER
STATIC MIXER
TANK VENT
UNION
WEIR
CYLINDER ACTUATOR
DIAPHRAGM ACTUATOR WITH POSITIONER
HAND OPERATOR
HYDRAULIC OPERATOR
MOTOR OPERATOR
PNEUMATIC OPERATOR
SOLENOID OPERATOR
TERMINAL STRIP IN LOCAL PANEL FOR INTERFACE WITH COMPUTER/MUX
FLOW RATE CONTROLLER
FLOW ELEMENT (VENTURI)
INSERT FLOW ELEMENT (VENTURI)
MAGNETIC FLOWMETER
ORIFICE PLATE
PARSHALL FLUME
ROTAMETER
ACOUSTIC OR DOPPLER INLINE FLOWMETER
"V" NOTCH WEIR
VERTICAL TURBINE SOLIDS HANDLING PUMP
INLINE MIXER

WEIR GATE
WEIR
BLOWER
SUBMERSIBLE PUMP
CENTRIFUGAL PUMP
CENTRIFUGE AND SLUDGE CAKE PUMP
DIAPHRAGM PUMP
HOSE PUMP
METERING PUMP
POSITIVE DISPLACEMENT PUMP
PLUNGER PUMP
PRESSURE PUMP
PROGRESSIVE CAVITY PUMP
ROTARY LOBE PUMP
VARIBLE INLET VANE DAMPER
INSERTION MASS FLOW METER
LIMITS OF WORK (TRADE, CONTRACT, ETC.)
POINT OF CONNECTION NEW WORK TO EXISTING WORK

GENERAL NOTES

1. INSTRUMENT SUFFIX:

   NUMERIC SUFFIXES IDENTIFY INSTRUMENTS WITH DIFFERENT FUNCTIONS (E.G., A RUN AND AN OUT OF SERVICE LIGHT) ARE PRECEDED BY A DECIMAL POINT (E.G., AA:MIL-343.1 AND AA:MIL-343.2

   ALPHABETIC SUFFIXES IDENTIFY MULTIPLE OCCURRENCES OF INSTRUMENTS WITH THE SAME FUNCTION (E.G.,TWO VALVE INDICATORS IN DIFFERENT PANELS, (E.G. AA:ZIL-161.1A, AND AA:ZIL-161.1B).

2. SEE MECHANICAL FOR ISOLATION RING DETAIL

INSTRUMENT SYMBOLS

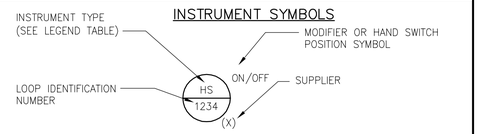

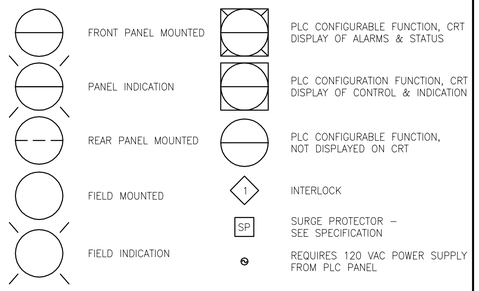

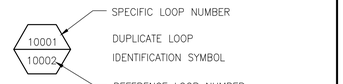

SUPPLIERS

ALL INSTRUMENTS ARE SPECIFIED BY INSTRUMENTATION (I) UNLESS INDICATED BY;

(E) SPECIFIED BY ELECTRICAL
(X) EXISTING
(M) SPECIFIED BY MECHANICAL
(H) SPECIFIED BY HVAC
(F) FURNISHED WITH EQUIPMENT
(P) SPECIFIED BY PLUMBING

CONTRACTOR SHALL PROVIDE ALL INSTRUMENTS AS SPECIFIED ON DATA SHEETS ATTACHED TO SPECIFICATION SECTION 13300

PLC OR DCS INPUT/OUTPUT SYMBOLS

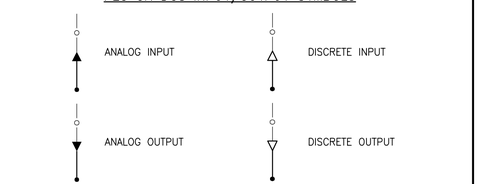

HAND SWITCH POSITION SYMBOLS

(UNLABELLED SWITCHES ARE TO BE ON-OFF)

A	AUTOMATIC	SBY	STANDBY
C	CLOSE	F/R	FORWARD/REVERSE
F	FAST OR FORWARD	L/R	LOCAL/REMOTE
H	HAND	LOR	LOCAL/OFF/REMOTE
J	JOG	HOR	HAND-OFF-REMOTE
L	LOCAL	HOA	HAND-OFF-AUTO
M	MANUAL	OSC	OPEN/STOP/CLOSE
O	OPEN OR OFF	FSR	FORWARD/STOP/REVERSE
R	RUN OR REMOTE	TSM	THRU/STOP/MIX
S/S	START/STOP	OSF	OFF/SLOW/FAST
E/S	EMERGENCY STOP	OTC	OPEN/TRAVEL/CLOSE

AECOM

PROJECT

DOWNTOWN AREA COLLECTION SYSTEM AND PUMP STATIONS

CONTRACT No. 2019-02
SRF No. 4486

OWNER

TOWN OF ORLEANS, MA
19 SCHOOL ROAD
ORLEANS, MA 02653
(508) 240-3700

ENGINEER

AECOM TECHNICAL SERVICES, INC.
9 JONATHAN BOURNE DRIVE
POCASSET, MA 02559
PHONE: (508) 833-6950
www.aecom.com

REGISTRATION



ISSUE/REVISION

I/R	DATE	DESCRIPTION

PROJECT NUMBER

60587515

Designed By:	S. PAPAZIAN
Drawn By:	S. PAPAZIAN
Dept Check:	Y. RIZK
Proj Check:	T. PARECE
Date:	JANUARY 2020
Scale:	AS NOTED

DISCIPLINE

INSTRUMENTATION

SHEET TITLE

INSTRUMENTATION LEGEND, SYMBOLS, AND GENERAL NOTES

SHEET NUMBER

00 DI-001

Last saved by: TREMBLAYS (2020-01-27) Last Plotted: 2020-01-27
Filename: P:\60476644 - ORLEANS DOWNTOWN PUMP STATIONS\SHEETS\DI\00 DI-001 INSTRUMENTATION LEGEND, SYMBOLS, AND GENERAL NOTES.DWG

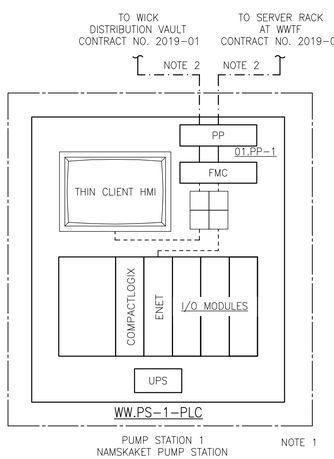

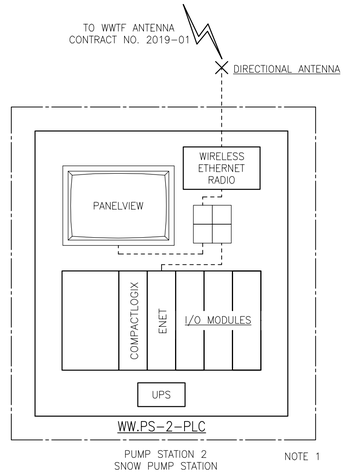

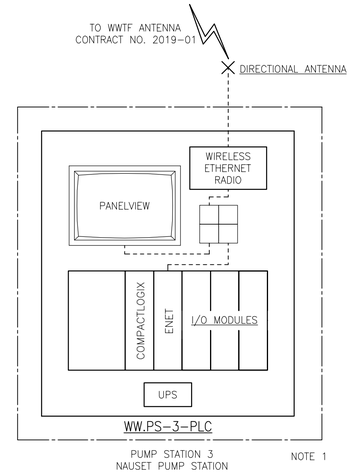

NOTES:

1. PUMP STATION PLC PANELS, REMOTE COMMUNICATION HARDWARE AND CONFIGURATION/INTEGRATION TO BE PROVIDED UNDER THE WWTF CONTRACT AND HAVE BEEN SHOWN HERE FOR CLARITY.
2. FIBER OPTIC CABLE, ANCILLARY HARDWARE, AND ASSOCIATED TERMINATIONS AND TESTING ASSOCIATED WITH THE REMOTE PUMP STATIONS TO BE PROVIDED UNDER THE WWTF CONTRACT.

LEGEND

----------	ETHERNET
—·—·—·—	FIBER MEDIA
	MANAGED ETHERNET SWITCH
FPP	FIBEROPTIC PATCH PANEL
FMC	FIBER MEDIA CONVERTER
UPS	UNINTERRUPTIBLE POWER SUPPLY

NOTES:

1. PLC BASED CONTROL PANELS TO BE PROVIDED UNDER CONTRACT NO. 2019-1, DOWNTOWN AREA WWTF AND EFFLUENT DISPOSAL.

AECOM

PROJECT

DOWNTOWN AREA COLLECTION SYSTEM AND PUMP STATIONS

CONTRACT No. 2019-02
SRF No. 4486

OWNER

TOWN OF ORLEANS, MA
19 SCHOOL ROAD
ORLEANS, MA 02653
(508) 240-3700

ENGINEER

AECOM TECHNICAL SERVICES, INC.
9 JONATHAN BOURNE DRIVE
POCASSET, MA 02559
PHONE: (508) 833-6950
www.aecom.com

REGISTRATION



Jan 24 2020

ISSUE/REVISION

I/R	DATE	DESCRIPTION

PROJECT NUMBER

60587515

Designed By:	**S. PAPAZIAN**
Drawn By:	**S. PAPAZIAN**
Dept Check:	**Y. RIZK**
Proj Check:	**T. PARECE**
Date:	**JANUARY 2020**
Scale:	**AS NOTED**

DISCIPLINE

INSTRUMENTATION

SHEET TITLE

SYSTEM ARCHITECTURE

SHEET NUMBER

00 DI-601

Last saved by: TREMBLAYS (2019-04-22) Last Plotted: 2020-01-27
Filename: P:\60476844 - ORLEANS DOWNTOWN PUMP STATIONS\SHEET\SD\00 DI-601.DWG

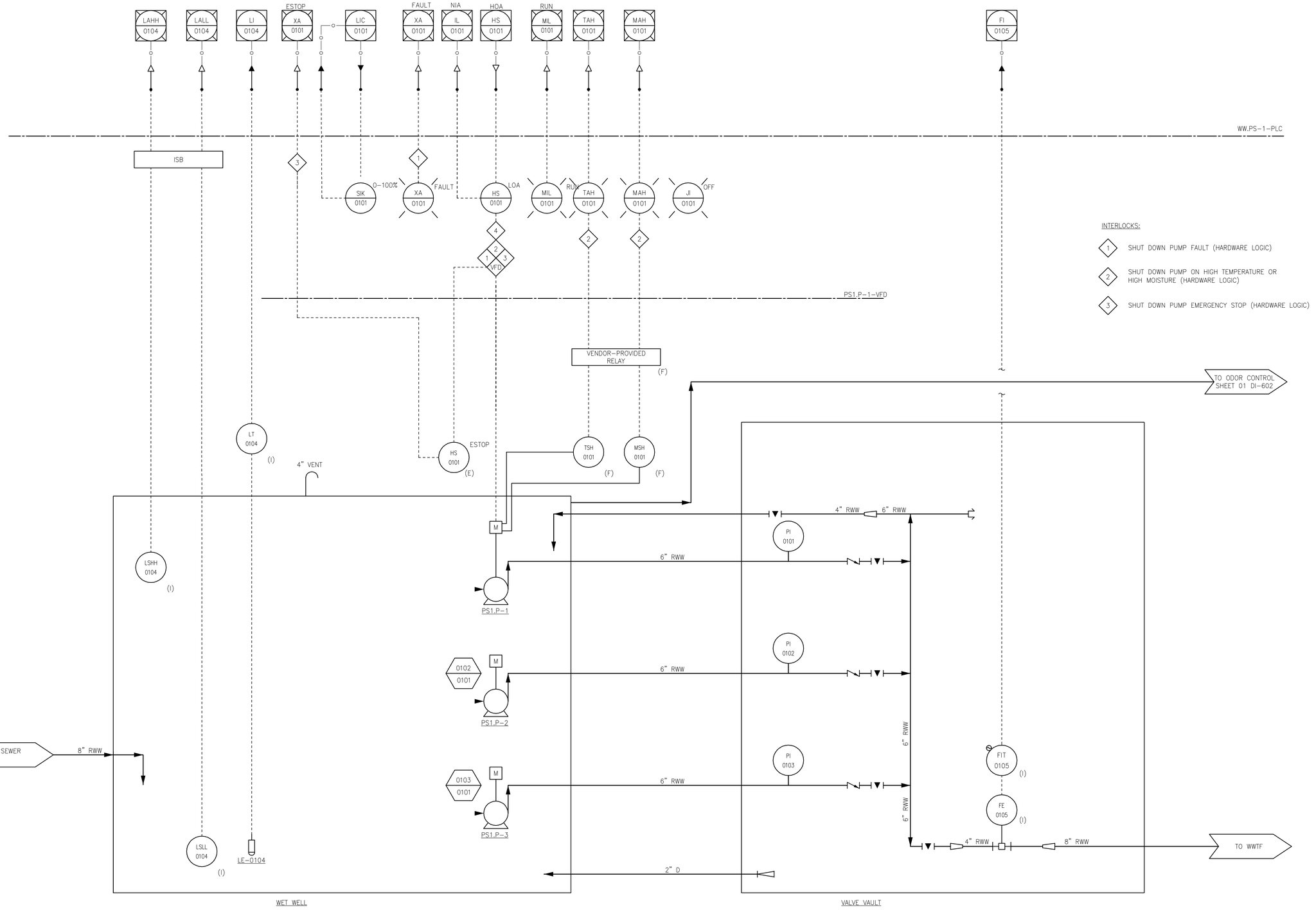

Last saved by: TREMBLAYS (2020-01-24) Last Plotted: 2020-01-27
Filename: P:\60476644 - ORLEANS DOWNTOWN PUMP STATIONS\SHEETS\DI\10 DI-601.DWG

AECOM

PROJECT

DOWNTOWN AREA COLLECTION SYSTEM AND PUMP STATIONS

CONTRACT No. 2019-02
SRF No. 4486

OWNER

TOWN OF ORLEANS, MA
19 SCHOOL ROAD
ORLEANS, MA 02653
(508) 240-3700

ENGINEER

AECOM TECHNICAL SERVICES, INC.
9 JONATHAN BOURNE DRIVE
POCASSET, MA 02559
PHONE: (508) 833-6950
www.aecom.com

REGISTRATION

COMMONWEALTH OF MASSACHUSETTS
SARAH PAPAZIAN
INSTRUMENTATION
No.52296
REGISTERED PROFESSIONAL ENGINEER

Jan 24 2020

ISSUE/REVISION

I/R	DATE	DESCRIPTION

PROJECT NUMBER

60587515

Designed By:	S. PAPAZIAN
Drawn By:	S. PAPAZIAN
Dept Check:	Y. RIZK
Proj Check:	T. PARECE
Date:	JANUARY 2020
Scale:	AS NOTED

DISCIPLINE

INSTRUMENTATION

SHEET TITLE

PUMP STATION 1 P&ID

SHEET NUMBER

01 DI-601

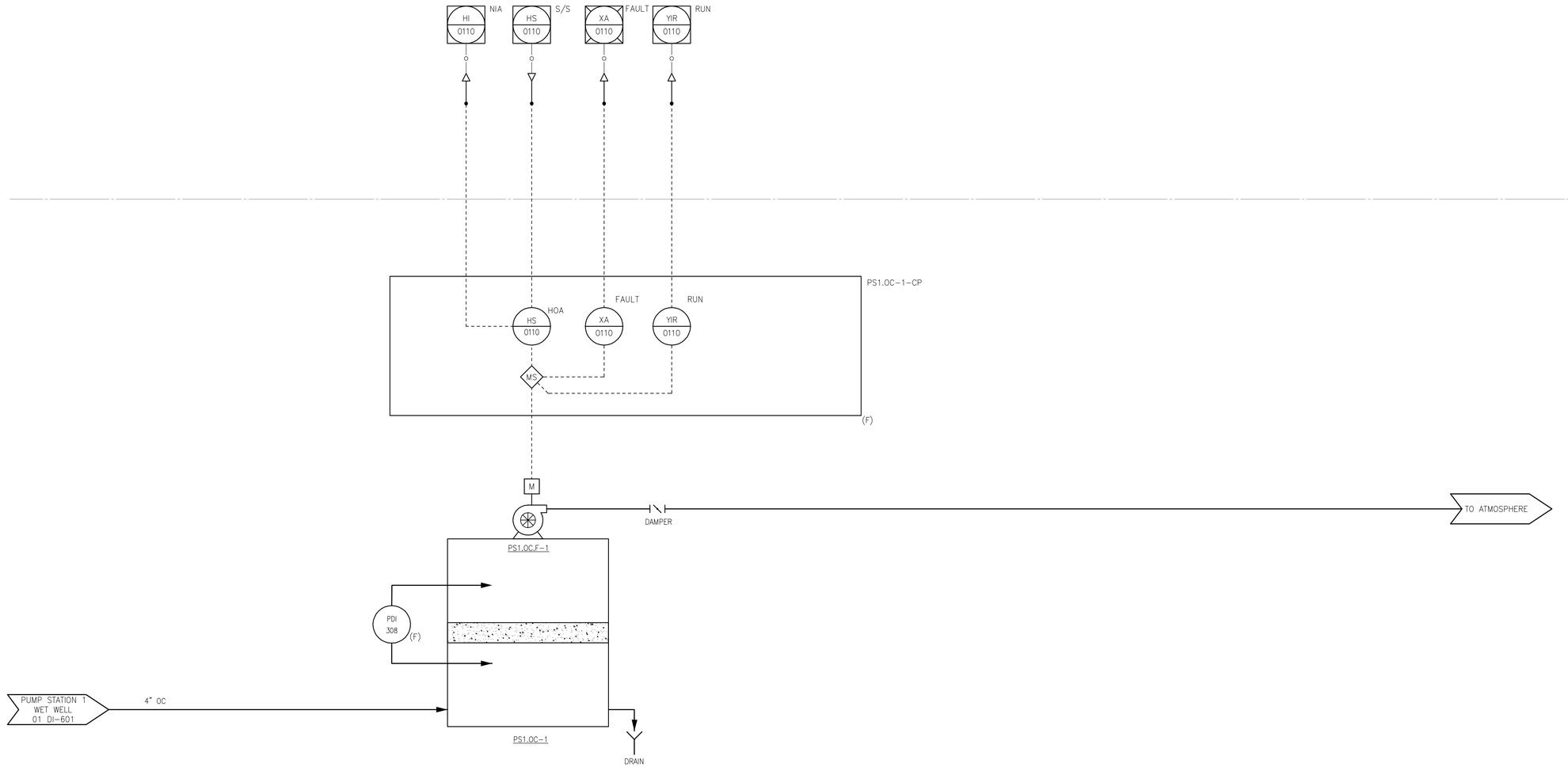

Last saved by: TREMBLAYS (2019-06-06) Last Plotted: 2020-01-27
Filename: P:\60476844 - ORLEANS DOWNTOWN PUMP STATIONS\SHEETS\DI\01 DI-602.DWG

PROJECT

DOWNTOWN AREA COLLECTION SYSTEM AND PUMP STATIONS

CONTRACT No. 2019-02
SRF No. 4486

OWNER

TOWN OF ORLEANS, MA
19 SCHOOL ROAD
ORLEANS, MA 02653
(508) 240-3700

ENGINEER

AECOM TECHNICAL SERVICES, INC.
9 JONATHAN BOURNE DRIVE
POCASSET, MA 02559
PHONE: (508) 833-6950
www.aecom.com

REGISTRATION

COMMONWEALTH OF MASSACHUSETTS
SARAH PAPPAS
INSTRUMENTATION
No.52296
REGISTERED
PROFESSIONAL ENGINEER

Jan 24 2020

ISSUE/REVISION

I/R	DATE	DESCRIPTION

PROJECT NUMBER

60587515

Designed By:	----
Drawn By:	----
Dept Check:	----
Proj Check:	T. PARECE
Date:	JANUARY 2020
Scale:	AS NOTED

DISCIPLINE

INSTRUMENTATION

SHEET TITLE

PUMP STATION 1 ODOR CONTROL P&ID

SHEET NUMBER

01 DI-602

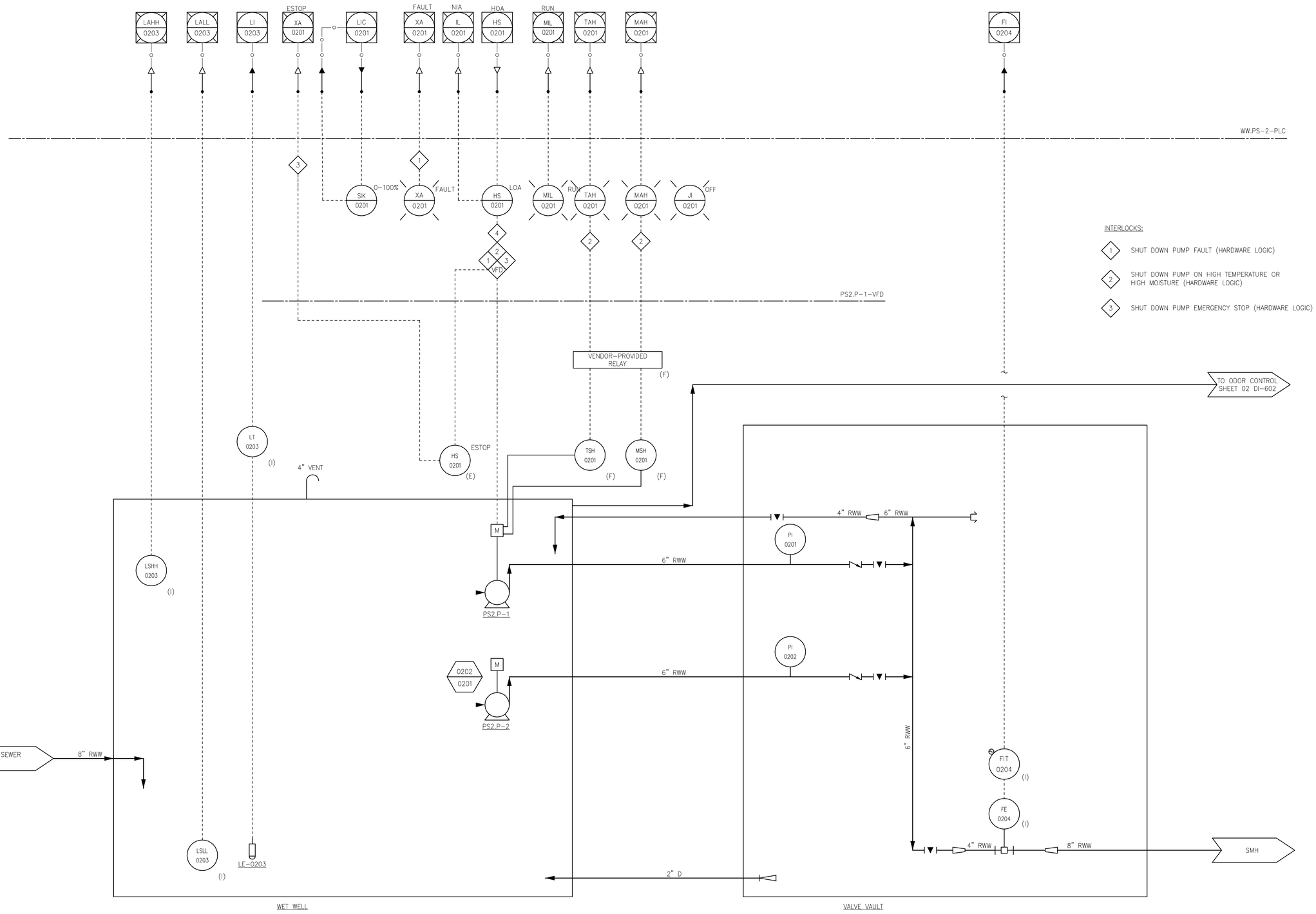

Last saved by: TREMBLAYS (2019-04-22) Last Plotted: 2020-01-27
Filename: P:\60476644 - ORLEANS DOWNTOWN PUMP STATIONS\SHEETS\DI\02 DI-601.DWG

AECOM

PROJECT

DOWNTOWN AREA COLLECTION SYSTEM AND PUMP STATIONS

CONTRACT No. 2019-02
SRF No. 4486

OWNER

TOWN OF ORLEANS, MA
19 SCHOOL ROAD
ORLEANS, MA 02653
(508) 240-3700

ENGINEER

AECOM TECHNICAL SERVICES, INC.
9 JONATHAN BOURNE DRIVE
POCASSET, MA 02559
PHONE: (508) 833-6950
www.aecom.com

REGISTRATION

COMMONWEALTH OF MASSACHUSETTS
SARAH PAPAZIAN
INSTRUMENTATION
No.52296
REGISTERED PROFESSIONAL ENGINEER

Jan 24 2020

ISSUE/REVISION

I/R	DATE	DESCRIPTION

PROJECT NUMBER

60587515

Designed By:	**S. PAPAZIAN**
Drawn By:	**S. PAPAZIAN**
Dept Check:	**Y. RIZK**
Proj Check:	**T. PARECE**
Date:	**JANUARY 2020**
Scale:	**AS NOTED**

DISCIPLINE

INSTRUMENTATION

SHEET TITLE

PUMP STATION NO. 2 P&ID

SHEET NUMBER

02 DI-601

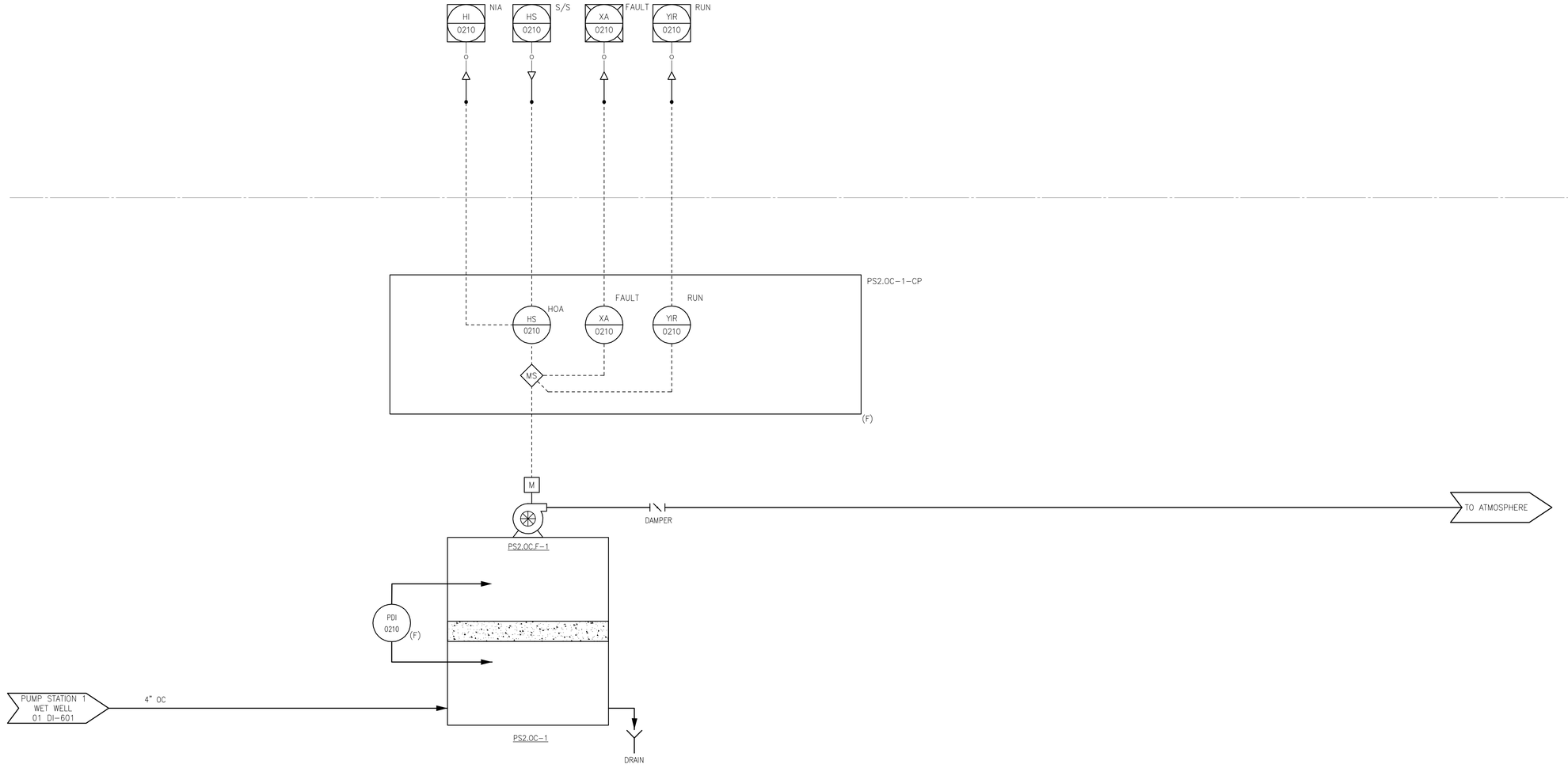

Last saved by: TREMBLAYS (2019-06-06) Last Plotted: 2020-01-27
Filename: P:\60476844 - ORLEANS DOWNTOWN PUMP STATIONS\SHEET\SD\02 DI-602.DWG

PROJECT

DOWNTOWN AREA COLLECTION SYSTEM AND PUMP STATIONS

CONTRACT No. 2019-02
SRF No. 4486

OWNER

TOWN OF ORLEANS, MA
19 SCHOOL ROAD
ORLEANS, MA 02653
(508) 240-3700

ENGINEER

AECOM TECHNICAL SERVICES, INC.
9 JONATHAN BOURNE DRIVE
POCASSET, MA 02559
PHONE: (508) 833-6950
www.aecom.com

REGISTRATION

COMMONWEALTH OF MASSACHUSETTS
SARAH PAPPUN
INSTRUMENTATION
No.52296
REGISTERED
PROFESSIONAL ENGINEER

Jan 24 2020

ISSUE/REVISION

I/R	DATE	DESCRIPTION

PROJECT NUMBER

60587515

Designed By:	----
Drawn By:	----
Dept Check:	----
Proj Check:	T. PARECE
Date:	JANUARY 2020
Scale:	AS NOTED

DISCIPLINE

INSTRUMENTATION

SHEET TITLE

PUMP STATION 2 ODOR CONTROL P&ID

SHEET NUMBER

02 DI-602

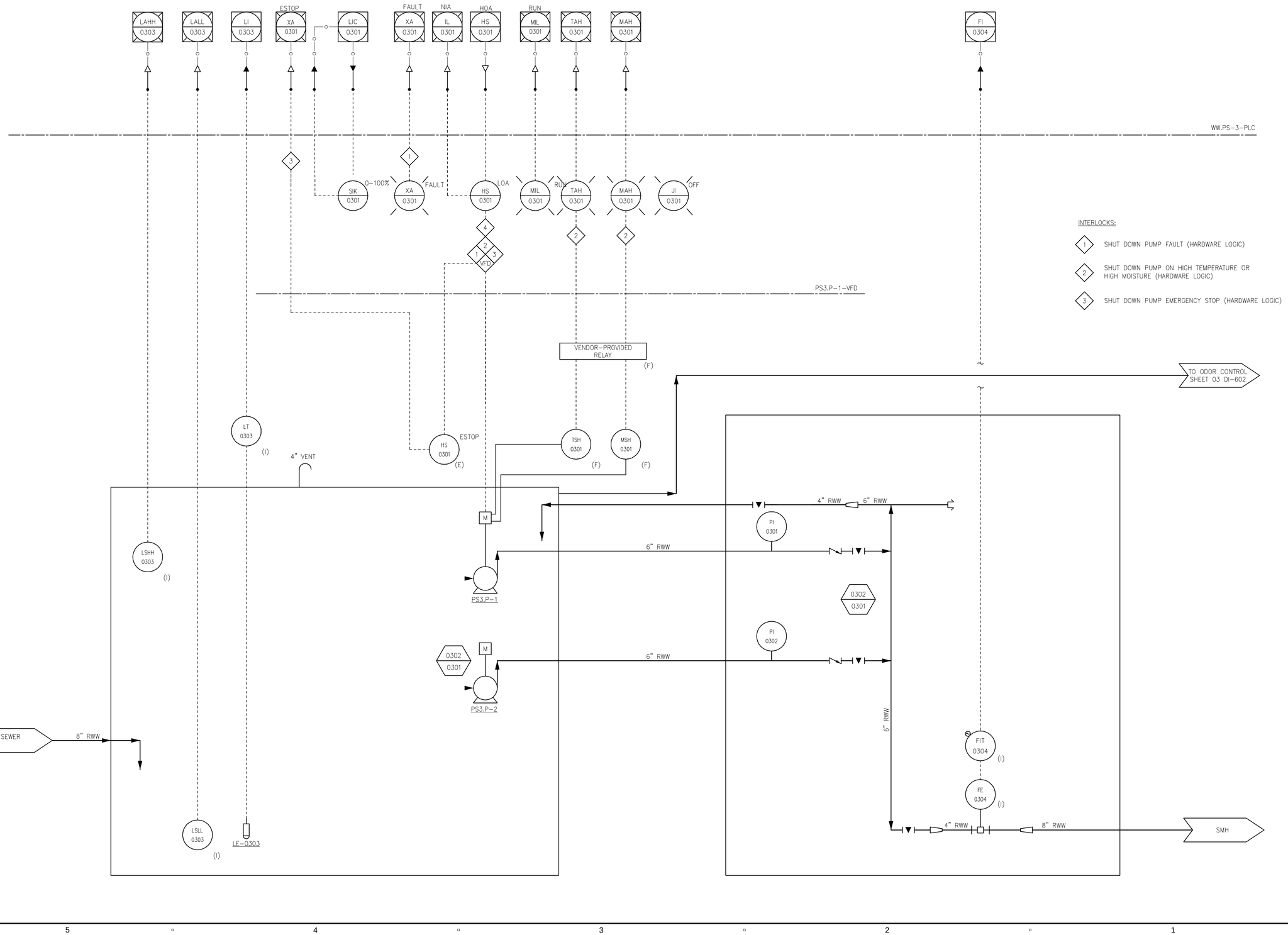

Last saved by: TREMBLAYS (2019-04-22) Last Plotted: 2020-01-27
Filename: P:\60476644 - ORLEANS DOWNTOWN PUMP STATIONS\SHEETS\DI\03 DI-601.DWG

AECOM

PROJECT

DOWNTOWN AREA COLLECTION SYSTEM AND PUMP STATIONS

CONTRACT No. 2019-02
SRF No. 4486

OWNER

TOWN OF ORLEANS, MA
19 SCHOOL ROAD
ORLEANS, MA 02653
(508) 240-3700

ENGINEER

AECOM TECHNICAL SERVICES, INC.
9 JONATHAN BOURNE DRIVE
POCASSET, MA 02559
PHONE: (508) 833-6950
www.aecom.com

REGISTRATION

COMMONWEALTH OF MASSACHUSETTS
SARAH PAPAZIAN
INSTRUMENTATION
No.52296
REGISTERED PROFESSIONAL ENGINEER

Jan 24 2020

ISSUE/REVISION

I/R	DATE	DESCRIPTION

PROJECT NUMBER

60587515

Designed By:	**S. PAPAZIAN**
Drawn By:	**S. PAPAZIAN**
Dept Check:	**Y. RIZK**
Proj Check:	**T. PARECE**
Date:	**JANUARY 2020**
Scale:	**AS NOTED**

DISCIPLINE

INSTRUMENTATION

SHEET TITLE

PUMP STATION NO. 3 P&ID

SHEET NUMBER

03 DI-601

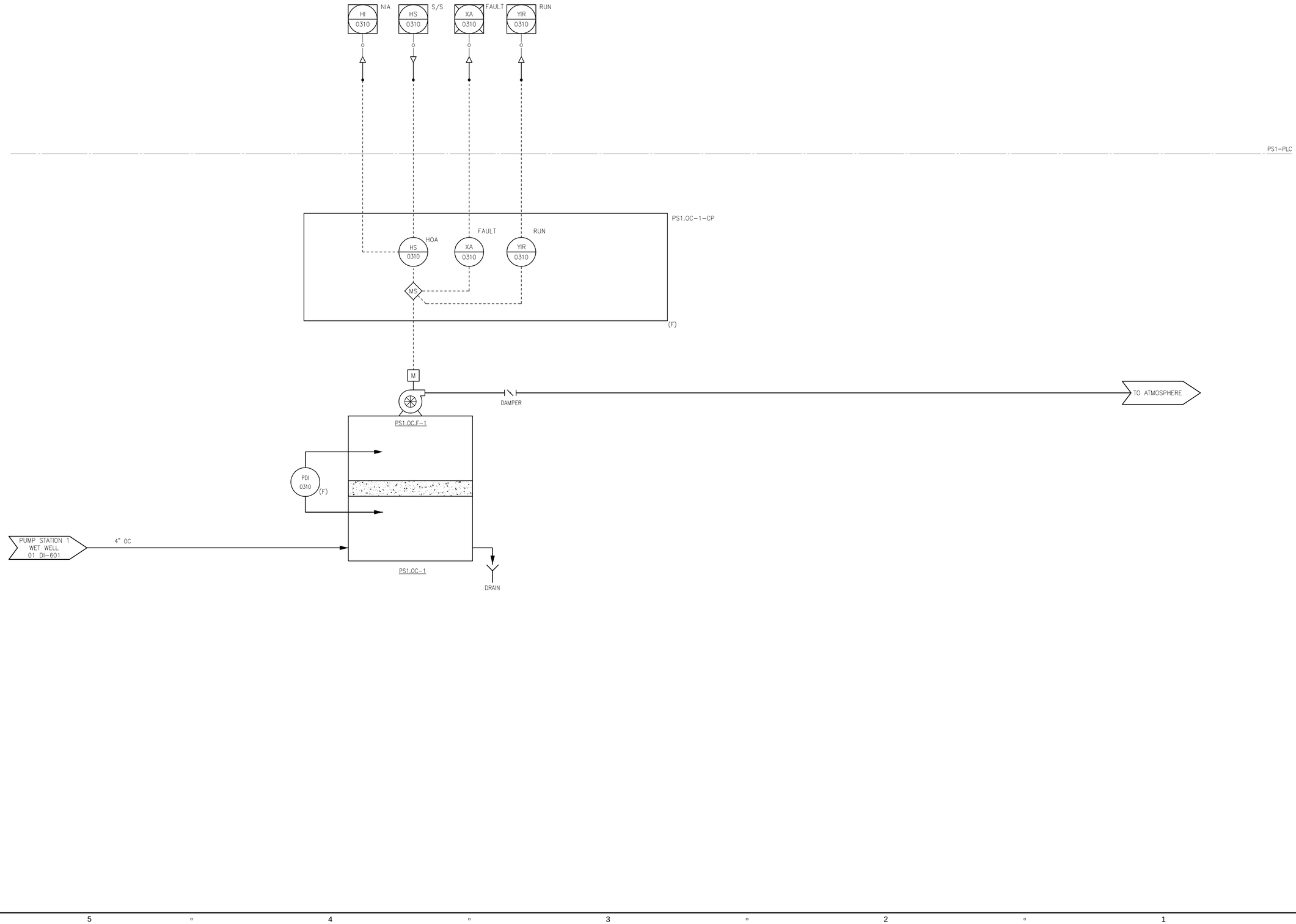

Last saved by: TREMBLAYS (2019-06-06) Last Plotted: 2020-01-27
Filename: P:\60476844 - ORLEANS DOWNTOWN PUMP STATIONS\SHEETS\DI03 DI-603.DWG

AECOM

PROJECT

DOWNTOWN AREA COLLECTION SYSTEM AND PUMP STATIONS

CONTRACT No. 2019-02
SRF No. 4486

OWNER

TOWN OF ORLEANS, MA
19 SCHOOL ROAD
ORLEANS, MA 02653
(508) 240-3700

ENGINEER

AECOM TECHNICAL SERVICES, INC.
9 JONATHAN BOURNE DRIVE
POCASSET, MA 02559
PHONE: (508) 833-6950
www.aecom.com

REGISTRATION

COMMONWEALTH OF MASSACHUSETTS
SARAH PAPPUN
INSTRUMENTATION
No.52296
REGISTERED
PROFESSIONAL ENGINEER

Jan 24 2020

ISSUE/REVISION

I/R	DATE	DESCRIPTION

PROJECT NUMBER

60587515

Designed By:	----
Drawn By:	----
Dept Check:	----
Proj Check:	T. PARECE
Date:	JANUARY 2020
Scale:	AS NOTED

DISCIPLINE

INSTRUMENTATION

SHEET TITLE

PUMP STATION 3 ODOR CONTROL P&ID

SHEET NUMBER

03 DI-603

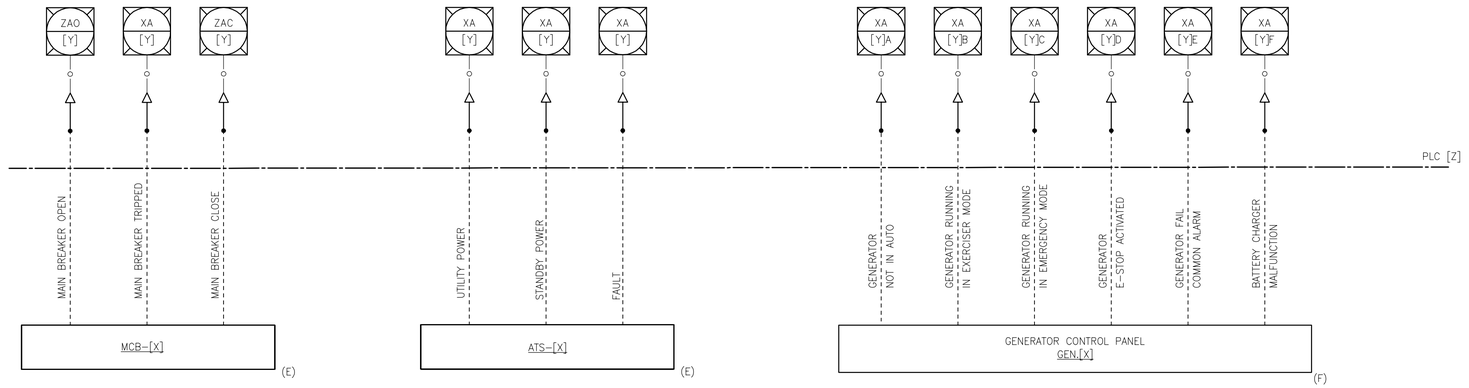

EQUIP TAG [X]	LOOP NO. [Y]	LOCATION	PLC [Z]
MCB.01-1	0111	PUMP STATION 1	WW.PS-1-PLC
MCB.02-1	0211	PUMP STATION 2	WW.PS-2-PLC
MCB.03-1	0311	PUMP STATION 3	WW.PS-3-PLC

EQUIP TAG	LOOP NO. [Y]	LOCATION	PLC [Z]
ATS.01-1	0121	PUMP STATION 1	WW.PS-1-PLC
ATS.02-1	0212	PUMP STATION 2	WW.PS-2-PLC
ATS.03-1	0312	PUMP STATION 3	WW.PS-3-PLC

EQUIP TAG [X]	LOOP NO. [Y]	LOCATION	PLC [Z]
GEN.01-1	0131	PUMP STATION 1	WW.PS-1-PLC
GEN.02-1	0213	PUMP STATION 2	WW.PS-2-PLC
GEN.03-1	0313	PUMP STATION 3	WW.PS-3-PLC

Last saved by: TREMBLAYS (2019-06-06) Last Plotted: 2020-01-27
Filename: P:\60476644 - ORLEANS DOWNTOWN PUMP STATIONS\SHEET\SD\99 DI-601.DWG

AECOM

PROJECT

DOWNTOWN AREA COLLECTION SYSTEM AND PUMP STATIONS

CONTRACT No. 2019-02
SRF No. 4486

OWNER

TOWN OF ORLEANS, MA

19 SCHOOL ROAD
ORLEANS, MA 02653
(508) 240-3700

ENGINEER

AECOM TECHNICAL SERVICES, INC.
9 JONATHAN BOURNE DRIVE
POCASSET, MA 02559
PHONE: (508) 833-6950
www.aecom.com

REGISTRATION

COMMONWEALTH OF MASSACHUSETTS
SARAH PAPPUN
INSTRUMENTATION
No.52296
REGISTERED
PROFESSIONAL ENGINEER

Jan 24 2020

ISSUE/REVISION

I/R	DATE	DESCRIPTION

PROJECT NUMBER

60587515

Designed By:	----
Drawn By:	----
Dept Check:	----
Proj Check:	T. PARECE
Date:	JANUARY 2020
Scale:	AS NOTED

DISCIPLINE

INSTRUMENTATION

SHEET TITLE

MISCELLANEOUS SIGNALS

SHEET NUMBER

99 DI-601